HEWLETT PACKARD

Operating and
Service Manual
for
Serials
2308A-00101
and Above

HP-IB Isolated DAC
Power Supply Programmer
Model 59501B

HP-IB ISOLATED DAC
POWER SUPPLY PROGRAMMER
MODEL 59501B

OPERATING AND SERVICE MANUAL FOR

SERIALS 2308A-00101 AND ABOVE

*For Serials above 2308A-00101
a change page may be included.

HP Part No. 59501-90004
Manual Microfiche No. 59501-90005

Printed: April 1983

SAFETY SUMMARY

The following general safety precautions must be observed during all phases of operation, service, and repair of this instrument. Failure to comply with these precautions or with specific warnings elsewhere in this manual violates safety standards of design, manufacture, and intended use of the instrument. Hewlett-Packard Company assumes no liability for the customer's failure to comply with these requirements.

BEFORE APPLYING POWER.

Verify that the product is set to match the available line voltage and the correct fuse is installed.

GROUND THE INSTRUMENT.

This product is a Safety Class 1 instrument (provided with a protective earth terminal). To minimize shock hazard, the instrument chassis and cabinet must be connected to an electrical ground. The instrument must be connected to the ac power supply mains through a three-conductor power cable, with the third wire firmly connected to an electrical ground (safety ground) at the power outlet. For instruments designed to be hard-wired to the ac power lines (supply mains), connect the protective earth terminal to a protective conductor before any other connection is made. Any interruption of the protective (grounding) conductor or disconnection of the protective earth terminal will cause a potential shock hazard that could result in personal injury. If the instrument is to be energized via an external autotransformer for voltage reduction, be certain that the autotransformer common terminal is connected to the neutral (earthed pole) of the ac power lines (supply mains).

INPUT POWER MUST BE SWITCH CONNECTED.

For instruments without a built-in line switch, the input power lines must contain a switch or another adequate means for disconnecting the instrument from the ac power lines (supply mains).

DO NOT OPERATE IN AN EXPLOSIVE ATMOSPHERE.

Do not operate the instrument in the presence of flammable gases or fumes.

KEEP AWAY FROM LIVE CIRCUITS.

Operating personnel must not remove instrument covers. Component replacement and internal adjustments must be made by qualified service personnel. Do not replace components with power cable connected. Under certain conditions, dangerous voltages may exist even with the power cable removed. To avoid injuries, always disconnect power, discharge circuits and remove external voltage sources before touching components.

DO NOT SERVICE OR ADJUST ALONE.

Do not attempt internal service or adjustment unless another person, capable of rendering first aid and resuscitation, is present.

DO NOT EXCEED INPUT RATINGS.

This instrument may be equipped with a line filter to reduce electromagnetic interference and must be connected to a properly grounded receptacle to minimize electric shock hazard. Operation at line voltages or frequencies in excess of those stated on the data plate may cause leakage currents in excess of 5.0 mA peak.

SAFETY SYMBOLS.

⚠ — Instruction manual symbol: the product will be marked with this symbol when it is necessary for the user to refer to the instruction manual (refer to Table of Contents).

⚡ — Indicates hazardous voltages.

⏚ or ⊥ — Indicate earth (ground) terminal.

WARNING — The WARNING sign denotes a hazard. It calls attention to a procedure, practice, or the like, which, if not correctly performed or adhered to, could result in personal injury. Do not proceed beyond a WARNING sign until the indicated conditions are fully understood and met.

CAUTION — The CAUTION sign denotes a hazard. It calls attention to an operating procedure, or the like, which, if not correctly performed or adhered to, could result in damage to or destruction of part or all of the product. Do not proceed beyond a CAUTION sign until the indicated conditions are fully understood and met.

DO NOT SUBSTITUTE PARTS OR MODIFY INSTRUMENT.

Because of the danger of introducing additional hazards, do not install substitute parts or perform any unauthorized modification to the instrument. Return the instrument to a Hewlett-Packard Sales and Service Office for service and repair to ensure that safety features are maintained.

Instruments which appear damaged or defective should be made inoperative and secured against unintended operation until they can be repaired by qualified service personnel.

MANUAL CHANGES
Models 59501B Power Supply Programmer
Manual HP P/N 59501-90004

8/11/89

Make all corrections in the manual according to errata below, then check the following table for your power supply serial number and enter any listed change(s) in the manual.

SERIAL		MAKE CHANGES
Prefix	Number	
All	---	Errata
2337A	00550-04729	1
2628A	04730-05509	1-2
2714A	05510-05979	1-3
2743A	05980-up	1-4

ERRATA:

In the replaceable parts list, page 6-2, change J3 to HP P/N 1251-7651.

In the replaceable parts list, page 6-5, change the part number for the Top Shell from HP P/N 3101-0622 to HP P/N 7101-0622, and change the part number for the Bottom Shell from HP P/N from 3101-0623 to HP P/N 7101- 0623.

CHANGE 1:

On page 7-3, replace Figure 7-2B with the Figure shown below.

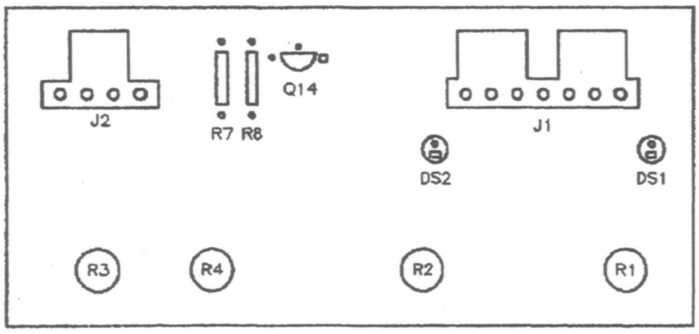

ERRATA:

On page 1-1 under ACCESSORIES (continued on page 1-2), change Rack Mounting Kit for one half module width unit, 3 1/2-inches high from HP P/N 5061-0054 to 5061 -0072, Rack Mounting Kit for two half module units, 3 1/2-inches high from HP P/N 5061-0076 to HP P/N 5061-0074 and Rack Mounting Kit for two units, (one half module width and one quarter module width) from HP P/N 5061-0055 to HP P/N 5061-0071.

In the replaceable parts list, on page 6-5, add HP Part No. 0960-0444, TQ. 1, MFR. CODE 28480, next to "Power Module on rear panel (includes voltage selection PC Board and Fuse)". On the same page, under Mechanical, change Top shell to HP Part No.7101-0622 and Bottom shell to HP Part No. 7101-0623.

ERRATA:

In the replaceable parts list, on page 6-2, connector J3 has been changed to HP P/N 1252-1006.

CHANGE 2:

In the replaceable parts list, page 6-2, under A1 Main Board Assembly change C8 to HP P/N 0160-4808. On page 6-5, under Chassis Electrical change S2 to HP P/N 3101-2854.

If replacement of the old switch is required use new switch HP P/N 3101-2854 and solder wires directly to the switch (see figure below).

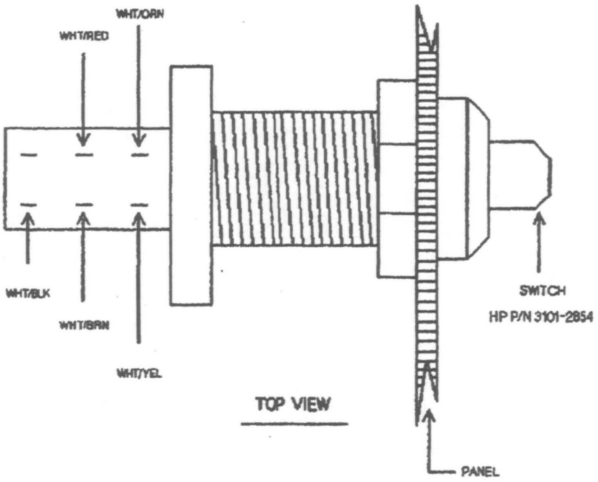

>CHANGE 3:

In the replaceable parts list, on page 6-2, change C35,36 to fxd cer, 1800pf, HP P/N 0160-4820, TQ 2.

On page 6-3, add Q15, PNP transistor/heat-sink assembly, HP P/N 5060-3241, TQ 1 and Q16, NPN transistor/heatsink assembly HP P/N 5060-3242, TQ 1.

On page 6-4, change U33 to IC, Voltage Regulator, HP P/N 1826-0128, TQ 1, add R81,82 fxd film, 47ohms, 1/4W, HP P/N 0683-4705, TQ 2.

On page 7-2, change the lower left corner of Figure 7-2A to appear as follows;

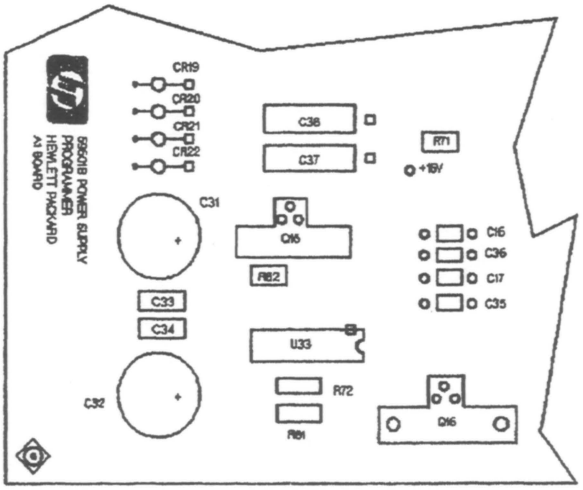

On page 7-1, change the lower left corner of Figure 7-1 to appear as follows;

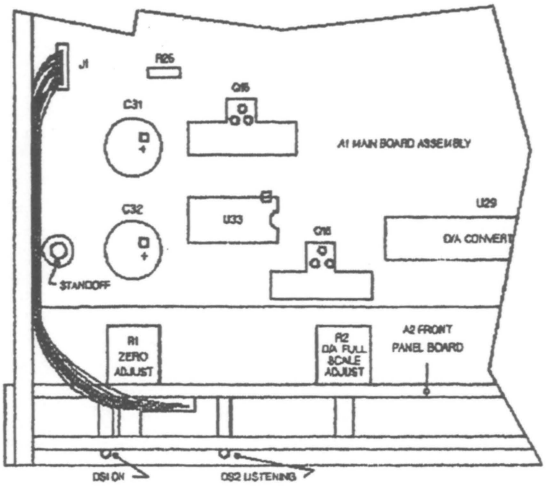

On page 7-4, change the +/-15V Regulated Supply in Figure 7-3 (sheet 1) to appear as follows;

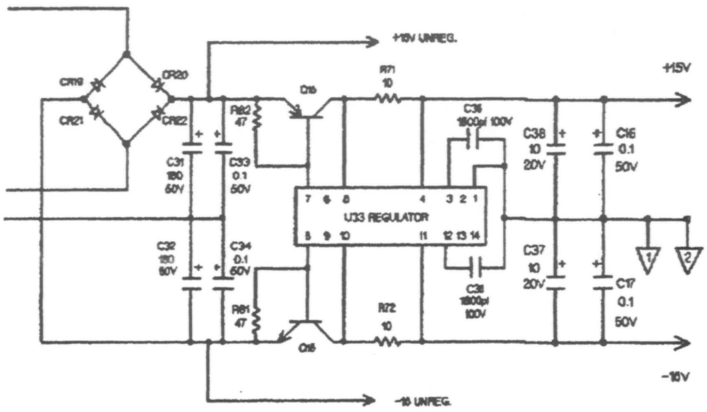

ERRATA:

In the replaceable parts list, page 6-4 change U32 to HP P/N 1826-0122.

ERRATA:

In the replaceable parts list page 6-4 change the description of U32 to; IC 5V regulator and heatsink assembly and change the HP P/N to 5060-9665. On page 6-5 delete Heatsink (A1U32) HP P/N 1205-0402.

CHANGE 4:

In the replaceable parts list, page 6-2 change A1J3 to HP P/N 1252-0268.

ERRATA:

In the replaceable parts list, change the part number for FOOT from HP P/N 5040-7201 to HP P/N 5041-8801 (qty 4).

TABLE OF CONTENTS

Section		Page
I	GENERAL INFORMATION	1-1
	1-1 INTRODUCTION	1-1
	1-3 DESCRIPTION	1-1
	1-7 HP-IB CAPABILITIES	1-1
	1-9 SPECIFICATIONS	1-1
	1-11 ACCESSORIES	1-1
	1-13 INSTRUMENT AND MANUAL IDENTIFICATION	1-2
	1-16 ORDERING ADDITIONAL MANUALS	1-2
	1-18 RELATED DOCUMENTATION	1-2
II	INSTALLATION	2-1
	2-1 INITIAL INSPECTION	2-1
	2-3 Mechanical Check	2-1
	2-5 Electrical Check	2-1
	2-7 REPACKAGING FOR SHIPMENT	2-1
	2-9 INSTALLATION DATA	2-1
	2-10 Outline Drawing	2-1
	2-13 Rack Mounting	2-1
	2-15 Equipment Required	2-1
	2-17 HP-IB Connector	2-1
	2-20 System Connections	2-2
	2-22 Setting Addresses	2-2
	2-25 Unipolar/Bipolar Mode Switch	2-3
	2-27 Input Power Requirements and Line Voltage Conversion	2-3
	2-30 Power Cable	2-4
III	OPERATING INSTRUCTIONS	3-1
	3-1 INTRODUCTION	3-1
	3-3 PRE-OPERATIONAL CONSIDERATIONS	3-1
	3-5 CONTROLS AND INDICATORS	3-1
	3-6 Front Panel	3-1
	3-14 Rear Panel	3-2
	3-17 PROGRAMMING FUNDAMENTALS	3-2
	3-20 Calculating Data Word Values	3-2
	3-29 Sending Data Words	3-4
	3-35 USING 59501B AS A POWER SUPPLY PROGRAMMER	3-4
	3-37 Voltage Programming with Gain	3-4
	3-43 59501B/HP Power Supply Connections	3-6
	3-51 Power Supply CV Programming	3-12
	3-60 BPS/A CV Programming	3-15
	3-67 CC Programming	3-17
III (Con't.)	3-73 USING 59501B AS A LOW LEVEL DC SIGNAL SOURCE	3-17
	3-75 Unipolar Mode	3-17
	3-79 Bipolar Mode	3-19
IV	PRINCIPLES OF OPERATION	4-1
	4-1 OVERALL DESCRIPTION	4-1
	4-3 Digital Processing Circuits	4-2
	4-9 Digital-to-Analog Converter (DAC)	4-2
	4-11 Analog Amplifier Circuits	4-2
	4-16 DETAILED CIRCUIT DESCRIPTION	4-3
	4-18 Power-On Preset	4-3
	4-20 Address Comparator	4-3
	4-22 Acceptor Handshake	4-3
	4-24 Listen Logic	4-4
	4-27 Clock Generator	4-4
	4-29 Isolators	4-4
	4-31 Data Storage	4-4
	4-36 Digital-to-Analog Converter (DAC) and I/V Converter	4-5
	4-38 Output Amplifier	4-6
	4-44 Range Switch	4-6
	4-49 Turn-On/Turn-Off Control	4-6
	4-53 Bias Voltage	4-6
V	MAINTENANCE	5-1
	5-1 INTRODUCTION	5-1
	5-3 TEST EQUIPMENT REQUIRED	5-1
	5-6 CHECKOUT PROCEDURES	5-1
	5-9 TROUBLESHOOTING	5-1
	5-11 Overall Troubleshooting	5-5
	5-13 Digital Circuits Troubleshooting	5-5
	5-14 Acceptor Handshake Troubleshooting	5-5
	5-15 REPAIR AND REPLACEMENT	5-5
	5-17 REPLACEMENT PARTS	5-6
	5-19 ADJUSTMENT AND CALIBRATION	5-6
	5-21 Calibration	5-6
	5-27 Front Panel Adjustments	5-6
VI	REPLACEABLE PARTS	6-1
VII	CIRCUIT DIAGRAMS AND COMPONENT LOCATION DIAGRAMS	7-1

SECTION I
GENERAL INFORMATION

1-1 INTRODUCTION

1-2 This instruction manual contains operating and service instructions for the HP-IB Isolated D/A Power Supply Programmer Model 59501B. Installation instructions and sample programs are also provided. The 59501B allows HP power supplies to be digitally controlled via the Hewlett-Packard Interface Bus (HP-IB) from a calculator, computer, or other controller. The digital format is bit parallel, byte serial, ASCII coded format. The 59501B can also be used on the HP-IB as a digitally programmable low level dc signal source. Since the 59501B can be controlled (programmed) by various control devices such as HP 9800 desk-top computers, hereafter in this manual, the controlling device will be referred to as the "controller", except when specific programming examples are provided.

1-3 DESCRIPTION

1-4 The 59501B is basically a digital-to-analog (D/A) converter that provides an output voltage in response to digital data received on the HP-IB. Two programmable output ranges (1V and 10V) are available. In addition, a switch on the rear panel allows selecting either a unipolar or bipolar output mode. The unipolar mode provides a 0 to .999V or a 0 to 9.99V output range and the bipolar mode provides a −1V to +0.998V or a −10V to +9.98V output range. The 59501B's output can be used as a programming voltage for controlling a wide range of dc voltages and currents from HP power supplies or as a source voltage for testing electronic components such as integrated circuit packages (IC's).

1-5 Isolators within the 59501B protect other instrumentation on the HP-IB from damage that could be caused by power supply outputs. Also, an internal circuit ensures that the output is held near zero until programmed data is received. Power supply programming is accomplished through use of the 59501B's programmable output voltage and its front panel adjustments. By making the appropriate connections between the 59501B's rear terminals and the programming terminals on the supply, the output voltage (or current, if available) of the power supply can be programmed from zero to its full rated output. The 59501B's front panel adjustments provide fast and easy calibration of power supply outputs. The ZERO ADJUST enables the user to correct for small offsets in power supply response to programmed inputs. The POWER SUPPLY FULL SCALE ADJUSTMENT (COARSE and FINE) allows the user to set the maximum output desired from the power supply when the 59501B is programmed to its maximum output. This method of programming is called voltage programming with gain. Power supply programming is described in greater detail in Section III.

1-6 Programming the 59501B is accomplished through the transmission of four consecutive digits (four ASCII characters). The first digit specifies output range and the next three digits specify the magnitude within the selected range. The high/low range capability provides a ten to one improvement in resolution. Internal conversion circuitry enables the 59501B to produce its maximum output voltage in approximately 250μsec from the time the digital data is received. Output current up to 10 milliamps is available and is automatically limited to protect the 59501B and the user equipment.

1-7 HP-IB CAPABILITIES

1-8 The 59501B has "listener" and "acceptor handshake" HP-IB functional capabilities. The LISTENING indicator on the front panel provides a convenient means of monitoring the 59501B's operating status. The 59501B does not have: controller, talker, source handshake, service request, device trigger, extended listener, extended talker, parallel poll, and remote/local HP-IB functional capabilities. All HP-IB functional capabilities are described in IEEE Standard 488-1975.

1-9 SPECIFICATIONS

1-10 Detailed specifications for the 59501B are given in Table 1-1.

1-11 ACCESSORIES

1-12 The System-II cabinet accessories listed below may be ordered with the 59501B unit or separately from your local Hewlett-Packard field sales office (refer to list at rear of manual for addresses). All accessories applicable to System-II modular cabinets are fully described and illustrated in the Hewlett-Packard Electronic Instruments and Systems catalog.

HP Part No.	Description
5061-0088	Two front handles that attach to each side of 3 1/2" high cabinets.
5061-0094	Kit of lock link hardware for joining together cabinets of equal depth. Units can be joined side-by-side or vertically. This kit is required whenever two (or more) sub-module units are to be rack mounted side-by-side.
1460-1345	Tilt stand snaps into standard foot supplied with instrument – must be used in pairs.
5061-0054	Rack mounting kit for one half module width unit, 3 1/2-inches high. Includes one rack flange (ear) and one half module width extention panel (adapter).
5061-0076	Rack mounting kit for two half module units, 3 1/2" high. Kit includes two rack flanges (ears). Also, lock-together kit (5061-0094) is required for joining the two units together. The cabinets must also be of equal depth.
5061-0055	Rack mounting kit for two units (one half module width and one quarter module width). Kit includes one rack flange and one quarter width extension adapter. Lock-together kit (5061-0094) is required for joining the two units.
5061-0096	Support shelf for mounting one or more 3 1/2" high units which are half module or quarter module width. Cabinet depths need not be equal.
5061-2021	Front filler panel (one quarter module width) for 3 1/2" high support shelf.
5061-2022	Front filler panel (one half module width) for 3 1/2" high support shelf.
1494-0015	Slide kit for support shelves mounted in HP rack enclosures.

1-13 INSTRUMENT AND MANUAL IDENTIFICATION

1-14 Hewlett-Packard instruments are identified by a two part serial number. The first part is the serial number prefix, a number-letter combination that denotes the date of a significant design change and the country of manufacture. The first two digits indicate the year (10 = 1970, 11 = 1971, etc.), the second two digits indicate the week, and the letter "A" designates the U. S. A. as the country of manufacture. The second part is the instrument serial number; a different sequential number is assigned to each instrument, starting with 00101.

1-15 If the serial number on your instrument does not agree with those on the title page of the manual, Change Sheets supplied with the manual of Manual Backdating Changes define the difference between your instrument and the instrument described by this manual.

1-16 ORDERING ADDITIONAL MANUALS

1-17 One manual is shipped with each instrument. Additional manuals may be purchased from your local Hewlett-Packard field office (see the list at the rear of this manual for addresses). Specify the model number, serial number prefix, and the HP Part Number provided on the title page.

1-18 RELATED DOCUMENTATION

1-19 In addition to this manual, the unit is shipped with Programming Note 59501A/HP85-1 (HP Part No. 59501-90003). This note also applies to the 59501B in all respects and provides programming examples for use with the HP85 or other BASIC language controllers, as well as CV/CC Programming Connections between the 59501A and various HP Power Supplies. This information supplements the programming examples for the 9825 given in Section III of this manual.

Table 1-1. Specifications, Model 59501A

D/A CONVERTER

DC Output Voltage: Programmable in high or low ranges within the voltage limits shown below. Output mode is unipolar or bipolar and is selectable via rear panel switch.

	High	Low
Unipolar	0 to 9.99 Volts	0 to +.999 Volts
Bipolar	−10 to +9.98 Volts	−1 to +.998 Volts

DC Output Current: 10mA

Resolution:

	High	Low
Unipolar	10mV	1mV
Bipolar	20mV	2mV

Accuracy: Specified at 23° C ± 5°C

	High	Low
Unipolar	.1% + 5mV	.1% + 1mV
Bipolar	.1% + 10mV	.1% + 2mV

* **Stability:** Change in output over 8 hour interval under constant line, load, and ambient following a 30 minute warm-up.

	High	Low
Unipolar	.04% + .5mV	.04% + ,1mV
Bipolar	.04% + 1mV	.04% + .2mV

Temperature Coefficient:

	High	Low
Unipolar	.01%/°C + .5mV/°C	.01%/°C + .1mV/°C
Bipolar	.01%/°C + .5mV/°C	.01%/°C + .1mV/°C

Zero Adjust: Plus or minus 250 millivolts.

D/A Full Scale Adjust: Plus or minus 5%.

Programming Speed: The time required for output to go from zero to 99% of programmed output change is 250μsec (measured with resistive load connected to output terminals).

* Stability is included in accuracy specification measurements over the temperature range indicated.

POWER SUPPLY PROGRAMMING

Programming Network Specifications: In the following specifications, M represents the calibrated full scale value of the supply being programmed and P represents the actual programmed output. Note that the full scale value (M) can be any value within the supply's output range and is calibrated with the 59501B programmed to its maximum high range output.

Accuracy (Does not include power supply errors): Specified at 23°C ± 5°C.

	High	Low
Unipolar	.05%M + .25%P	.01%M + .25%P
Bipolar	0.1%M + .25%P	.02%M + .25%P

Isolation: 600Vdc between HP-IB data lines and output terminals.

Temperature Coefficient:

High	.005%M/°C + .015%P/°C
Low	.01%M/°C + .015%P/°C

Programming Resolution:

	High	Low
Unipolar	0.1%M	0.01%M
Bipolar	0.2%M	0.02%M

Programming Speed: D/A Conversion Time plus the programming speed of the power supply.

GENERAL

Input Power: Unit has ac power module which is settable to: 100/120/220/240Vac (−13%, +6%), 48-63Hz, 10VA. A 3-wire detachable line cord is supplied.

Temperature Range:

Operating: 0 to 55°C
Storage: −40 to 75°C

Dimensions:

(See Figure 2-1)

Weight:

Net: 1.82 kg. (4 lb.)
Shipping: 2.27 kg. (5 lb.)

SECTION II
INSTALLATION

2-1 INITIAL INSPECTION

2-2 Before shipment, this instrument was inspected and found to be free of mechanical and electrical defects. As soon as the instrument is received, proceed as instructed in the following paragraphs.

2-3 Mechanical Check

2-4 If external damage to the shipping carton is evident, ask the carrier's agent to be present when the instrument is unpacked. Check the instrument for external damage such as broken switches or connectors, and dents or scratches on the panel surfaces. If the instrument is damaged, file a claim with the carrier's agent and notify your local Hewlett-Packard Sales and Service Office as soon as possible (see list at rear of this manual for addresses).

2-5 Electrical Check

2-6 Check the electrical performance of the instrument as soon as possible after receipt. Section V of this manual contains procedures which will verify instrument operation on the HP-IB. These procedures are also suitable for incoming quality control inspection. Refer to the inside front cover of the manual for the Certification and Warranty statements.

2-7 REPACKAGING FOR SHIPMENT

2-8 To insure safe shipment of the instrument, it is recommended that the package designed for the instrument be used. The original packaging material is reusable. If it is not available, contact your local Hewlett-Packard field office to obtain the materials. This office will also furnish the address of the nearest service office to which the instrument can be shipped. Be sure to attach a tag to the instrument specifying the owner, model number, full serial number, and service required, or a brief description of the trouble.

2-9 INSTALLATION DATA

2-10 The 59501B is shipped ready for operation on the HP-IB. Before connecting it to a controller and applying power, read paragraph 2-26.

2-11 Outline Drawing

2-12 Figure 2-1 illustrates the outline shape and dimensions of Model 59501A.

2-13 Rack Mounting

2-14 The 59501B can be rack mounted in a standard 19-inch rack panel either by itself or alongside another half (or quarter) System-II module of equal height and depth. All rack mounting accessories for this unit are listed in paragraph 1-11. Also, complete installation instructions are included with each rack mounting kit.

2-15 Equipment Required

2-16 If an HP controller is used to program the 59501B, the following equipment is required:

HP Controller	HP-IB Interface Card	ROM
85A, 86A, 87A	82937A HP-IB I/O	
9825A	98034A HP-IB I/O	General I/O Extended I/O
9816A, 9826A, 9836A	(Standard)	(Standard)

2-17 HP-IB Connector

2-19 The HP-IB connector on the rear of the 59501B interfaces directly to the HP-IB. Figure 2-2 illustrates the pin configuration of the HP-IB connector which is a 24-pin,

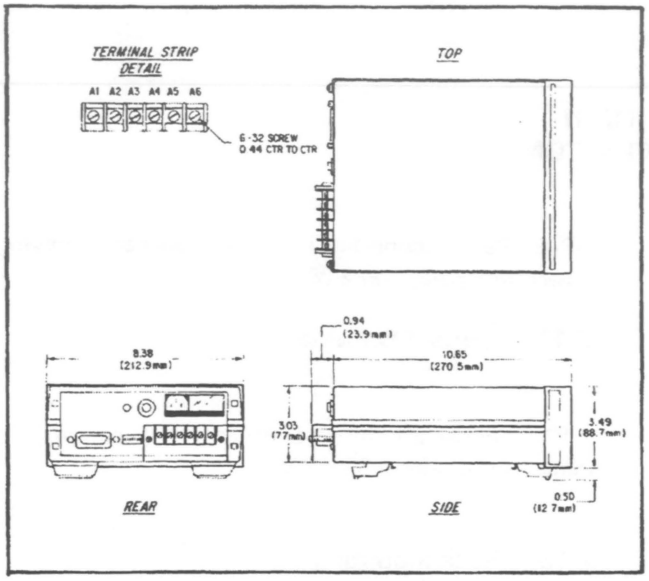

Figure 2-1. 59501B Outline Drawing

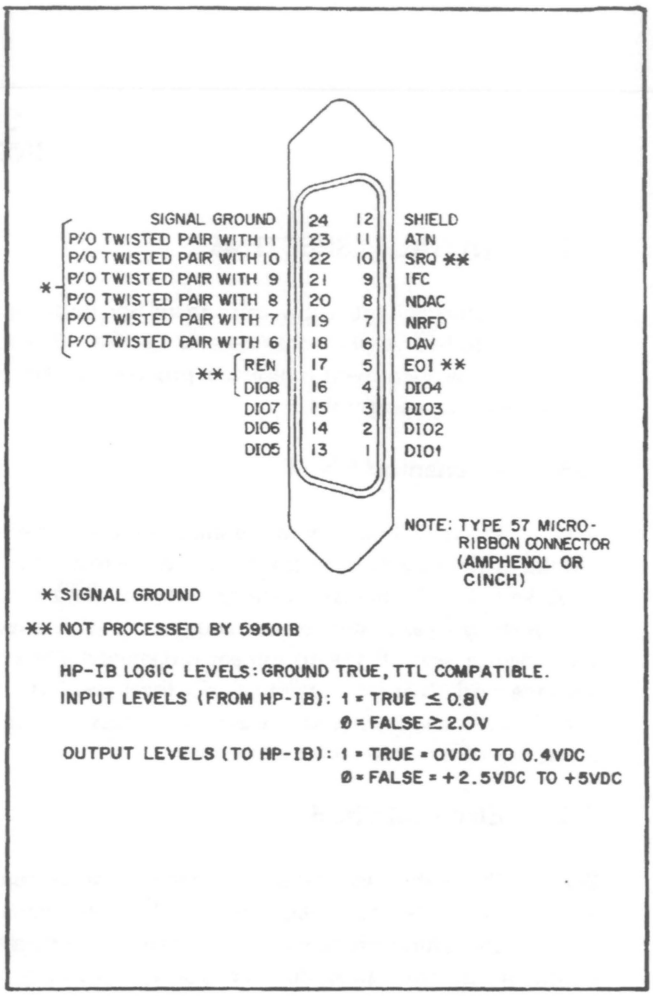

Figure 2-2. HP-IB Connector

type 57 micro-ribbon connector. One HP-IB cable is supplied with each HP computer and calculator I/O card package. Extra cables may be ordered separately.

HP-IB Cable Model No.	Cable Length
10631A	1m (3.3 ft.)
10631B	2m (6.6 ft.)
10631C	4m (13.2 ft.)

NOTE

The HP-IB connector supplied with this unit contains metric fasteners (colored black). If your HP-IB cable connector contains standard mating screws (silver), make a conversion using the hardware and instructions included in Metric Conversion Kit (5060-0138).

2-19 The HP-IB cables use the same piggyback connector on both ends. Up to three connectors may be stacked one upon another. As many as 15 instruments (including the controller) may be connected to the same HP-IB.

2-20 System Connections

2-21 Figure 2-3 illustrates a controller (e. g., a 9825A calculator) and a 59501B unit connected to the HP-IB. In this case, the 98034A interface card provides HP-IB capability for the 9825A calculator and is installed in any one of the three slots in the rear of the calculator. The 98034A card is equipped with the proper cable and connector to mate with the HP-IB connector on the rear of the 59501B. Note that specific connections between the 59501B's output terminals and the user's device (e.g. programmable power supply) are not illustrated on Figure 2-3. These connections depend upon the particular power supply being programmed and the type of control desired (output voltage or current). The connections required to program various HP power supplies are provided in Section III, paragraph 3-43 through 3-50.

2-22 Setting Addresses

2-23 The listen address for the 59501B is selected by address switches on the rear of the unit. The switches are factory set to the suggested listen address of & when the unit is shipped from the factory. As shown in Figure 2-4, there are seven address switches. The last two switches, 6 and 7 (XX), are ignored (have no affect). Switches 1, 4, and 5 are set to "0" and switches 2 and 3 are set to "1" to select a listen address of "&". Note that "&" is the suggested listen address and is one of 31 listen address possibilities. The address switch settings for each of the 31 listen address possibilities are listen in Table 2-1.

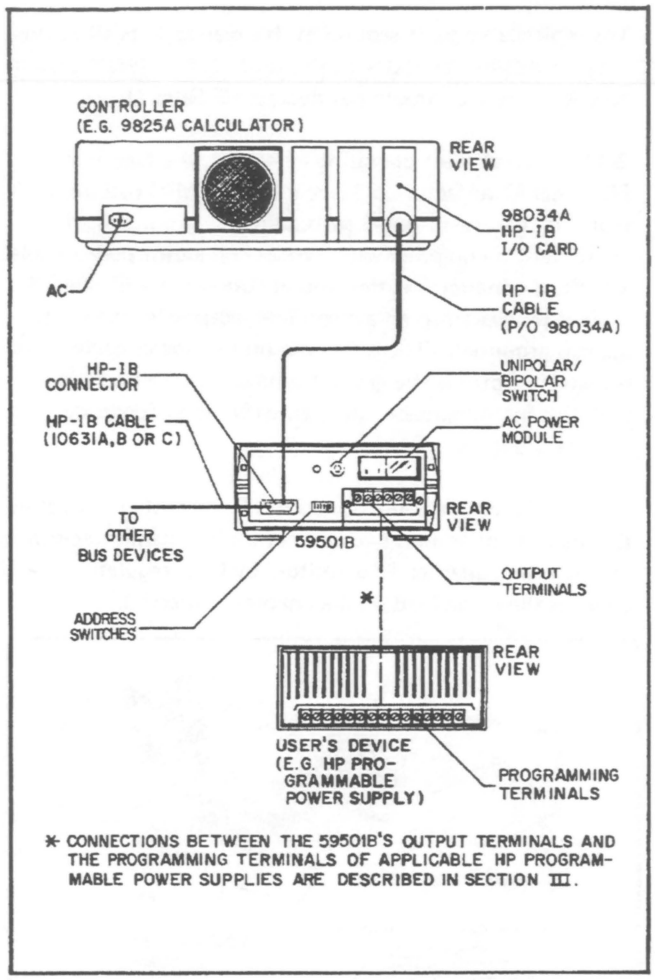

Figure 2-3. System Connections

2-24 The HP-IB bus interface cards for the HP calculators are shipped from the factory with a preset talk address of "U" and a preset listen address of "5". Before programming, write down the listen and/or talk address of all instruments connected to the HP-IB.

2-25 Unipolar/Bipolar Mode Switch

2-26 The UNIPOLAR/BIPOLAR mode switch is a push-in, push-out type switch located on the rear of the unit beneath the output terminal strip. In the UNIPOLAR mode (switch is in), the 59501B provides an output range of 0 to 0.999V or 0 to 9.99V. In the BIPOLAR mode (switch is out), the 59501B provides an output range of −1V to +0.998V or −10V to +9.998V. The switch is set to UNIPOLAR when the unit is shipped from the factory.

2-27 Input Power Requirements And Line Voltage Conversion

2-28 The 59501B may be operated continuously from a nominal 100V, 120V, 220V, or 240V (48-63Hz) power

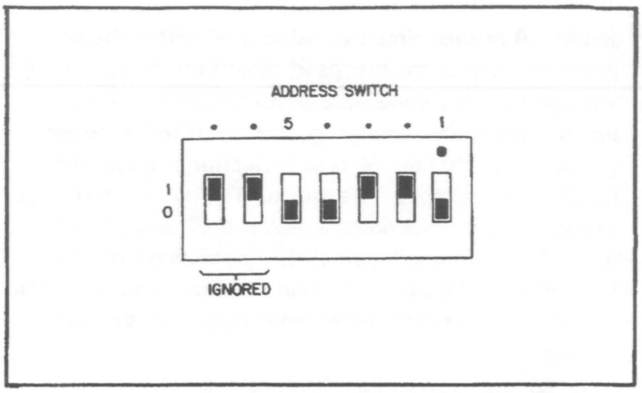

Figure 2-4. Listen Address Switches on Rear of 59501B

Table 2-1. Listen Addresses and Switch Settings

Address Switches					Listen Address Character
5	4	3	2	1	
0	0	0	0	0	SP
0	0	0	0	1	!
0	0	0	1	0	"
0	0	0	1	1	#
0	0	1	0	0	$
0	0	1	0	1	%
0	0	1	1	0	&
0	0	1	1	1	'
0	1	0	0	0	(
0	1	0	0	1	)
0	1	0	1	0	*
0	1	0	1	1	+
0	1	1	0	0	,
0	1	1	0	1	–
0	1	1	1	0	.
0	1	1	1	1	/
1	0	0	0	0	0
1	0	0	0	1	1
1	0	0	1	0	2
1	0	0	1	1	3
1	0	1	0	0	4
1	0	1	0	1	5
1	0	1	1	0	6
1	0	1	1	1	7
1	1	0	0	0	8
1	1	0	0	1	9
1	1	0	1	0	:
1	1	0	1	1	;
1	1	1	0	0	<
1	1	1	0	1	=
1	1	1	1	0	>

source. A printed circuit board located within the ac power module on the rear panel selects the power source. Voltage choices are available on both sides of the PC board. Before connecting the instrument to the power source, check that the PC board selection matches the nominal line voltage of the source. The operating voltage that is selected is the one printed on the lower-left side of the PC board (see Figure 2-5). As shipped from the factory, the PC board in this unit is positioned for 120Vac operation. To select another input voltage proceed as follows:

a. Remove power cable from instrument.
b. Move plastic door on power module aside.
c. Rotate FUSE PULL to the left and remove line fuse F1.
d. Remove PC board from slot. Select operating voltage by orienting PC board to position the desired voltage on top-left side of PC board. Push board firmly into slot.
e. Rotate FUSE PULL back into normal position and re-insert fuse F1 in holder using caution to select the correct value for F1 (125mA for 100V or 120V and 62.5mA slo-blo for 220V or 240V).
f. Close plastic door and connect power cable.

2-29 When the instrument leaves the factory, a 125mA fuse is installed for 120V operation. An envelope containing a 62.5mA fuse for 220V/240V operation is attached to the instrument. Make sure that the correct fuse value for F1 is installed if the position of the PC board is changed.

2-30 Power Cable

2-31 This unit is factory equipped with a power cord plug that is the most appropriate for the user's location. The replaceable parts section of this manual lists all of the power cords associated with this unit. If a different power cord is desired, contact your nearest HP Sales Office.

2-32 To protect operating personnel, the National Electrical Manufacturers Association (NEMA) recommends that the instrument panel and cabinet be grounded. This instrument is equipped with a three conductor power cable. The third conductor is the ground conductor and when the cable is plugged into an appropriate receptacle, the instrument is grounded. The offset pin on the power cable three-prong connector is the ground connection. In no event shall this instrument be operated without an adequate cabinet ground connection.

2-33 To preserve the protection feature when operating the instrument from a two-contact outlet, use a three-prong to two-prong adapter (if permitted by local regulations) and connect the green lead on the adapter to ground.

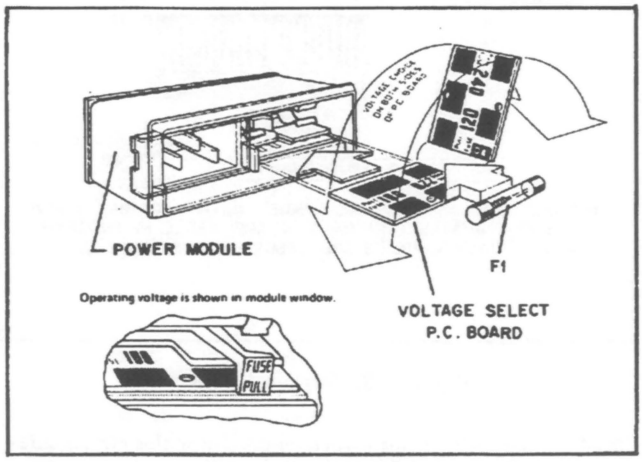

Figure 2-5. Line Voltage Conversion

SECTION III
OPERATING INSTRUCTIONS

3-1 INTRODUCTION

3-2 This section contains operating instructions and programming information for the 59501B Isolated DAC, Power Supply programmer. Since the 59501B can be used as a power supply programmer or as D/A converter (low level dc signal source), operating instructions and programming examples are provided to cover both applications. Additional information regarding use of the 59501B is provided in HP-IB/Power Supply Application Guide, HP Part No. 5952-3990.

3-3 PRE-OPERATIONAL CONSIDERATIONS

3-4 Before connecting the 59501B to an ac power source, ensure that the proper operating voltage (100, 120, 220, or 240Vac) has been selected and the proper fuse is installed (see paragraph 2-27). Also, check that the address switches are set correctly, the UNIPOLAR/BIPOLAR mode switch is set to the desired position, and all HP-IB system cabling is installed (see paragraphs 2-20 through 2-26). Connections between the 59501B and the user's device (e. g. HP Power Supply) are described in subsequent paragraphs.

3-5 CONTROLS AND INDICATORS

3-6 Front Panel

3-7 The 59501B front panel contains a power on indicator, a status indicator and four controls (screwdriver adjustments) as shown in Figure 3-1.

3-8 The power on (ON) indicator (1) (Figure 3-1) lights and the 59501B's internal supply voltages (+15V, ±15V, V_{dd}) are present when the line cord is plugged-in.

3-9 The LISTENING indicator (2) lights when the 59501B is addressed to "listen" and remains lighted until an "unlisten" command or the interface clear signal is received from the controller. When lighted, it indicates that the 59501B is enabled to process data words received on the HP-IB. When it is not lighted, it indicates that the 59501B is inhibited from processing data words.

3-10 The front panel screwdriver adjustments allow fast and easy calibration of D/A and power supply outputs. Each adjustment is described below.

3-11 The ZERO ADJUST (3) allows the 59501B output to be adjusted to 0V ± 250 millivolts when it is programmed to zero output. It can also be used to correct for small offsets in power supply response to programmed inputs when the 59501B is used as a power supply programmer.

3-12 The D/A FULL SCALE ADJUST (4) allows the 59501B output to be adjusted to maximum (±5%) when it is programmed to maximum. For example, if the 59501B is programmed to its maximum unipolar output in the high range, the D/A FULL SCALE ADJUST is normally used to set the output to 9.99V. However, it can also be used to set the output between 9.49V and 10.49V (i. e. 9.99V ±5%). The D/A FULL SCALE ADJUST is used when the 59501B is employed as a D/A (see paragraphs 3-73 through 3-80). When the 59501B is used as a power supply programmer, the POWER SUPPLY FULL SCALE ADJUST controls are utilized to set the power supply's output.

3-13 The POWER SUPPLY FULL SCALE ADJUST controls (COARSE and FINE) (5) enable the user to set the maximum output desired from the power supply when the 59501B is programmed to its maximum value. These adjustments can be used to calibrate the output of a power supply to its maximum rated output or to any lower value. For example, a 40Vdc power supply's output could be set to 20V when the 59501B is programmed to its maximum value. In this case, all 999 programming steps are utilized in programming the supply from 0 to 20V with a resolution of 20mV (approx.). Calibration of power supply outputs is described in paragraph 3-51 through 3-57.

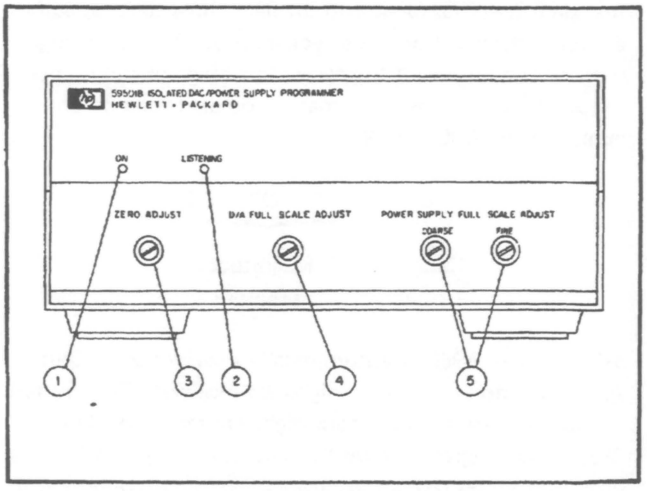

Figure 3-1. 59501B Front Panel

3-14 Rear Panel

3-15 The 59501B rear panel contains the HP-IB connector, the ADDRESS switches, the UNIPOLAR/BIPOLAR mode switch, the ac power module, and the output terminal strip as shown in Figure 3-2.

a. HP-IB connector – Interfaces directly to HP-IB (paragraph 2-17).
b. ADDRESS switches – Select "listen" address of 59501B (paragraph 2-22).
c. UNIPOLAR/BIPOLAR switch – Selects either the unipolar of bipolar output mode (paragraph 2-25).
d. Ac Power Module – Contains fuse and ac input voltage select PC board (paragraph 2-27).

3-16 The 59501B is interfaced with the user's device via the output terminal strip. Output terminals A1 and A2 allow access to the 59501B's D/A output while terminals A3 through A5 allow access to the power supply programming network. Figure 3-3 illustrates the connections required to program the output voltage of a typical HP power supply. In this case, a jumper is connected between terminals A2 and A3, and terminals A1, A4, and A5 are connected to the voltage programming terminals of the power supply. The method of programming and the connections required to program the output voltage or current of various HP supplies are described in paragraphs 3-35 through 3-72. When the 59501B is used as a low level dc signal source, only terminals A1 and A2 are connected to the user's device. Programming instructions for this application are given in paragraphs 3-73 through 3-80.

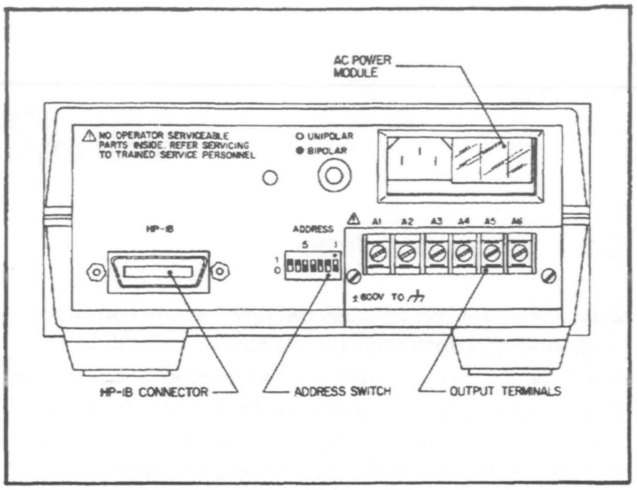

Figure 3-2. 59501B Rear Panel

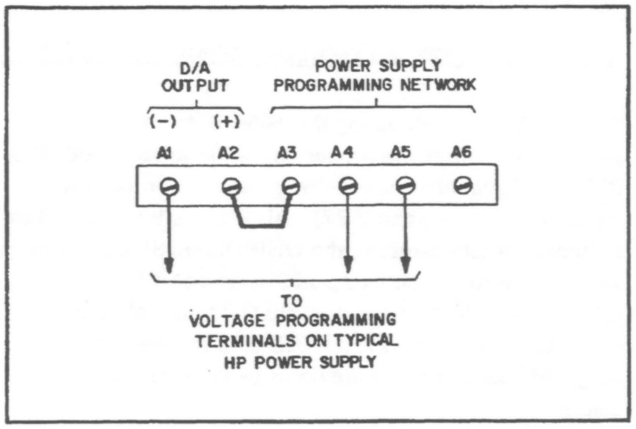

Figure 3-3. Rear Terminal Strip, Typical Connections

3-17 PROGRAMMING FUNDAMENTALS

3-18 The unipolar or bipolar output of the 59501B is programmed by a data word comprised of four ASCII characters (digits) received in the order shown below. The first digit specifies range and the next three digits specify the desired output within the selected range. The range digit must be the number 1 to specify low range or the number 2 to specify high range. The magnitude digits can be any number from 000 to 999.

D1	D2 D3 D4
Range	Magnitude
1 or 2	000-999

3-19 The 59501B automatically provides an output voltage as soon as the four digits are received. This output is retained until the next four digits are received. The 59501B is programmed by the magnitude digits in BCD to produce the desired output voltage. In the unipolar mode, 000 equals 00.0% of full range, 500 equals 50.0% of full range, and 999 equals 99.9% of full range. In the bipolar mode, 000 equals the maximum negative voltage output, 500 equals 0V output, and 999 equals the maximum positive voltage output.

3-20 Calculating Data Word Values

3-21 The following paragraphs describe the data word value calculations required to program the output of the 59501B. Similar calculations are required when programming power supply outputs using the 59501B. The programmable output range depends, of course, upon the power supply model being programmed. The desired output range of the particular power supply must be calibrated for programming with the 59501B. Power supply calibration procedures and sample programs are described in paragraphs 3-51 through 3-72.

3-22 Data word value calculations for the high (10V) and low (1V) 59501B output ranges are described below. Calculations are provided for both the unipolar and bipolar output modes. Each data word must be exactly four digits

long (one digit for range and three digits for magnitude). If more than four digits are sent to the 59501B, the desired output voltage will not appear at the output.

3-23 Unipolar Mode

3-24 Low Range. The desired 59501B output voltage values are from 0 to 0.999V programmable in 999 steps. The resolution in this range is equal to .999V/999, or 1mV per step. To calculate the correct data word value to produce the desired output within this range, proceed as follows:

1. The resolution in the low range is 1mV,
   Let D = .001
2. The range digit is 1 for the low range, so add 1 to the left of the 3 magnitude digits,
   Let R = 1000
3. The magnitude portion (M) is calculated by dividing the desired output voltage (V) by the least significant digit D. The magnitude portion must be rounded off to exactly 3 digits,
   M = INT (V/D + 0.5) = 3 magnitude digits
4. Combine range and rounded off magnitude portion to obtain the correct data word value (N),
   N = R + M

Example, desired voltage = 0.5123V

D = .001
R = 1000
M = INT (0.5123/.001 + 0.5)
M = INT (512.8)
N = 1000 + 512
N = 1512 = data word value

In this example, the desired output voltage is 0.5123 volts but the actual output is 0.512V because the resolution is 1mV (least significant digit equals .001):

V = M x D
V = 512 x .001
V = 0.512

3-25 High Range. The desired 59501B output voltage values are from 0 to 9.99V. The calculations are the same as for the low range, except resolution is 10mV and the high range is used. For the high range,

Let D = .01
and R = 2000

3-26 Bipolar Mode

3-27 Low Range. The desired 59501B output voltage values are from −1V to +0.998V programmable in 999 steps. For a −1V output, the magnitude digits are 000 and for a +0.998V output, the magnitude digits are 999. A 0V output is obtained when the magnitude digits are 500. Resolution in this range is equal to 1.998/999, or 2mV. To calculate the correct data word value to produce the desired positive or negative output voltage within this range, proceed as follows:

1. The resolution in the −1V to 0.998V range is 2mV,
   Let D = .002
2. The range digit is 1 for the low range, so add 1 to the left of the three magnitude digits,
   Let R = 1000
3. The magnitude portion (M) is calculated by adding 1 to the desired negative or positive output voltage (V) and dividing this sum by the least significant digit D. The magnitude portion must be rounded off to exactly 3 digits.
   M = INT (V + 1)/D + 0.5)
4. Combine range and rounded off magnitude potion to obtain the correct data word value (N),
   N = R + M

Example, desired voltage = −0.5123V

D = .002
R = 1000
M = INT (−5.123 + 1)/.002 + 0.5)
M = INT (+0.4877/.002 + 0.5)
M = INT (243.85 + 0.5)
M = INT (244.35)
N = 1000 + 244 = 1244

In this example, the desired output voltage is −0.5123V but the actual output is −0.512V because the resolution is 2mV (.002):

V = (M x D) --1
V = (244 x .002) − 1
V = 0.488 − 1
V = −0.512V

3-28 High Range. The desired output voltage values are from −10V to +9.98V. Calculations are similar to those for the low range, except resolution is 20mV on the high range, and 10 must be added to desired positive or negative output voltage in order to calculate the correct magnitude digits. For this range, the equation for the magnitude portion (M) of the data word value is:

M = INT ((V + 10)/D + 0.5)

Example, desired voltage = −5.123V

D = .02
R = 2000
M = INT ((−5.123 + 10)/D + 0.5)
M = INT (243.85 + 0.5)
M = INT (244.35) = 244
N = 2000 + 244 = 2244

In this example, the desired output voltage is −5.123V but the actual output is −5.12V because the resolution is 20mV (.002):

V = (M x D) −10
V = (244 x .02) − 10
V = 4.88 − 10
V = −5.12V

3-29 Sending Data Words

3-30 Before a data word is sent, a command must be issued establishing the controller as the "talker" and the 59501B as the "listener". The following examples assume that the controller (9825A calculator) has been assigned it standard talk and listen addresses of "U" and "5" respectively, and the 59501B has been assigned a listen address of "&".

3-31 Example 1 illustrates a command statement issued by a 9825A calculator. Note that in addition to the calculator talk address "U" and the 59501B listen address "&", the address code of the HP-IB Interface Card (98034A) must be included. It is assumed that the interface card has been assigned its standard select code of "7". The 9825A command statement also includes a constant data value of "125Ø" which is sent to the 59501B.

Example 1. Sending a Constant Data Value (9825A Command Satement)

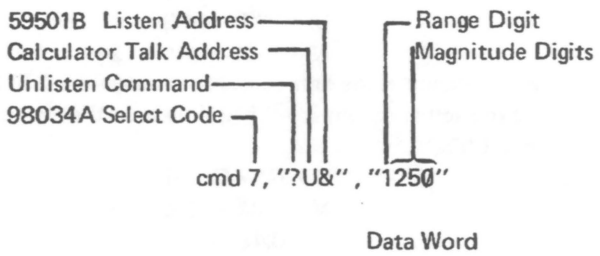

3-32 Example 2 illustrates a write statement (9825A calculator) which can also be used to address the 59501B to listen and send a constant data value. The 59501B listen address of "&" corresponds to an address of "Ø6" as defined in the 9825A General I/O ROM manual (09825-90024) Chapter 4. Note the format statement (line 0) used in Example 3. The "c" specifies a character field, while the "z" is used to suppress carriage return/line feed codes at the end of the write statement. Suppression of the carriage return/line feed codes is essential when programming the 59501B . If they are not suppressed, they will be processed as data characters by 59501B resulting in an undesired output.

Example 2. Sending a Constant Data Value (9825A Write Statement)

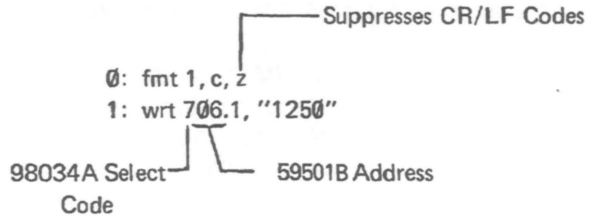

3-33 Command statements can only be used to send data constants. Write (9825A) statements can be used to send data constants but must be used to send variables.

3-34 Example 3 illustrates how a write statement (9825A) is used to send variable data to the 59501B . If variable N in line 1 were equal to 125Ø, this example would program the same output as the previous examples. Format specification f4.Ø deletes leading spaces and the z suppresses the CR/LF codes for the same reasons as described above.

Example 3. Sending Variable Data (9825A Write Statement)

```
Ø: fmt 1, f4.Ø, z
1: wrt 7Ø6.1, N
```

3-35 USING 59501B AS A POWER SUPPLY PROGRAMMER

3-36 Power supply programming is accomplished using the digitally controlled output voltage of the 59501B in conjunction with the ZERO ADJUST and POWER SUPPLY FULL SCALE ADJUST controls on the 59501B front panel. By making the appropriate connections between the 59501B's output terminals and the voltage programming terminals of a dc power supply, the output voltage (or current) of the power supply can be programmed from zero to the full rated output. This method of programming is called voltage programming with gain.

3-37 Voltage Programming With Gain

3-38 HP programmable power supplies have certain features in common. These features include: an internal reference (either a fixed regulated voltage or a fixed regulated constant current source), voltage and current comparators with their input terminals, and front panel controls (voltage and current) with connections at the rear panel terminals. A power supply can be controlled by making the appropriate connections on the rear panel and applying an external voltage (or in some cases current). For example, by disconnecting the internal reference voltage from the input circuits of the constant voltage comparator and replacing it with an external voltage source, the output voltage of the power supply is programmed by the value of the external voltage source.

3-39 Figure 3-4 illustrates the method by which a power supply's constant voltage output can be programmed using an external voltage with a voltage gain dependent upon the ratio of R_P to R_R. Note that this method is no different from the circuit normally used for constant voltage control of the output except that an external reference (the programming voltage source) has been substituted for the internal reference. On most supplies, external terminals are available so that the connections shown in Figure 3-4 can be accomplished without any internal wiring changes. In all HP remotely programmable power supplies, the summing point S is made available, and the configuration of Figure 3-4 can always be accomplished using the external programming voltage source E_P and external precision wire-wound resistors R_P and R_R. (R_R should not exceed 10k.) As indicated by the equation in Figure 3-4, R_P can be selected so that the resulting voltage gain is either less or greater than unity. It is possible to use the front panel control on the supply as the voltage gain control R_P.

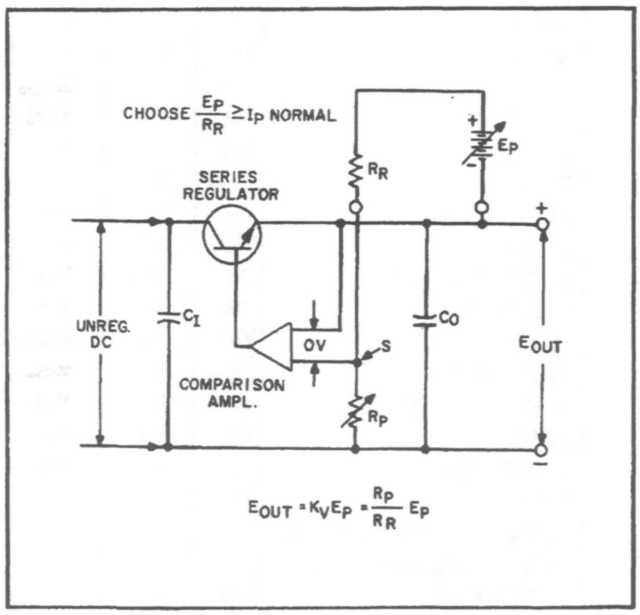

Figure 3-4. Voltage Programming with Variable Voltage Gain

3-40 Constant Voltage. Figure 3-5 illustrates the connections required for the 59501B to program the constant voltage (CV) output of a typical HP power supply. Note the similarities between Figures 3-4 and 3-5. The 59501B includes R_R (R76), R_P (COARSE and FINE POWER SUPPLY FULL SCALE ADJUST), and E_P (59501B output between terminals A1 and A2). The extra resistor (R77) between terminals A5 and A6 is used only when programming power supplies above 300 volts.

3-41 As shown in Figure 3-5, the supply's internal reference voltage ($+V_{REF}$) and VOLTAGE control are disconnected (dotted lines) and are replaced with the 59501B's output voltage and POWER SUPPLY FULL SCALE ADJUST. Note that in the unipolar mode, 59501B output terminal A1 is negative with respect to A2. This polarity must be complied with when making connections. The connections shown in Figure 3-5 are typical for <u>most</u> supplies.

3-42 Constant Current. Figure 3-6 illustrates the connections required for the 59501B to program the output current of a typical HP power supply. Programming constant current consists of replacing the internal reference with the output voltage from the 59501B and replacing the internal CURRENT control with the POWER SUPPLY FULL SCALE ADJUST controls on the 59501B. With these connections, the voltage developed across POWER SUPPLY FULL SCALE ADJUST (R_P) becomes the reference against which the voltage drop across the output current monitoring resistor (R_M) is compared. The relationship between E_P and the supply's output current depends upon the resistance ratio R_P/R_R and on the constant current programming coefficient (K_P) of the particular supply. The relationship between input voltage and output current is,

$$I_{OUT} = (E_P \times R_P) \div (K_P \times R_R)$$

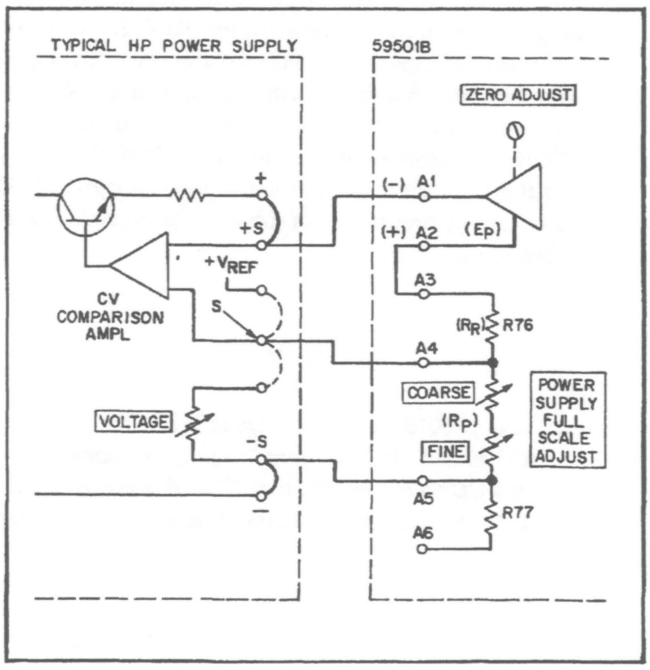

Figure 3-5. Typical Connections for CV Programming

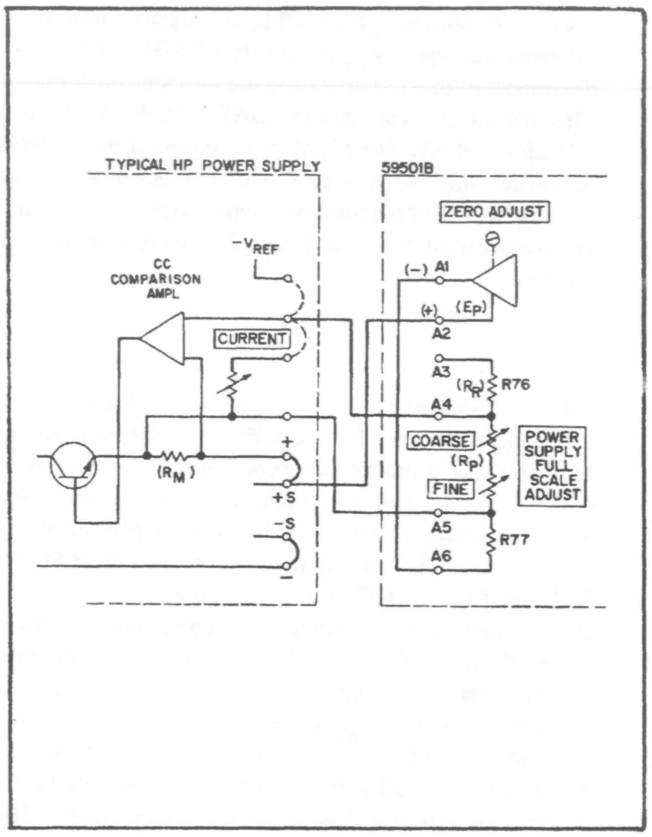

Figure 3-6. Typical Connections for CC Programming

3-43 59501B/HP Power Supply Connections

3-44 Table 3-1 lists the HP Power Supplies that can be programmed on the HP-IB using the 59501B. The table specifies if a supply is capable of CV and/or CC programming with the 59501B and also lists the applicable 59501B/power supply connection diagram. The accuracy of a power supply/59501B combination is the sum of the 59501B's accuracy plus the accuracy of the particular power supply. 59501B power supply programming accuracy specifications are given in Section I.

NOTE

One 59501B can only program a supply's CV or CC output. If it is desired to program both CV and CC on the HP-IB, two 59501B's are required with their address switches set to different addresses.

3-45 The leads (AWG No. 24, minimum) connecting the 59501B to the power supply should be twisted to reduce noise pickup. The longer the connecting leads, the more noise that can be introduced. Shielding will further improve noise rejection. After completing the connections, install the protective covers over the terminal strips on the 59501B and on the supply.

Table 3-1. HP Power Supply/59501B Capability Guide

Power Supply Model	59501B Programming Capabilities			
	CV	Figure	CC	Figure
6002A	Yes	3-7	Yes	3-14
6012A	Yes	3-8	Yes	3-15
6024A	Yes	3-9	Yes	3-16
6101A, 02A	Yes	3-7	No	– –
6104A, 05A	Yes	3-7	Yes	3-17
6106A	Yes	3-7	No	– –
6111A-13A	Yes	3-7	No	– –
6114A, 15A	Yes	3-7	Yes	3-17
6116A	Yes	3-7	No	– –
6177C, 81C, 86C	No	– –	Yes	3-18
6200B-03B	Yes	3-7	Yes	3-14
6204B-06B	Yes	3-7	No	– –
6207B, 09B	Yes	3-7	Yes	3-14
6220B, 24B, 26B	Yes	3-7	Yes	3-14
6227B, 28B	Yes	3-7	Yes	3-14
6253A, 55A	Yes	3-7	Yes	3-14
6256B-6274B	Yes	3-7	Yes	3-14
6281A, 84A, 89A, 94A, 99A	Yes	3-7	Yes	3-14
6282A, 85A, 86A, 90A, 91A, 96A	Yes	3-7	Yes	3-14
6427B-6448B	Yes	3-10	No	– –
6453A, 56B, 59A	Yes	3-11	Yes	3-19
6464C	Yes	3-12	Yes	3-19
6466C-6483C	Yes	3-10	Yes	3-19
6823A, 24A	Yes	3-13	No	– –
6825A-6827A	Yes	3-13	Yes	3-20,

3-46 CV Programming Connections. Figures 3-7 through 3-13 illustrate the connections required to program the CV output of the applicable power supplies. The dotted line connections represent jumpers which must be removed. All other jumpers must be installed as illustrated. Note that only those power supply terminals pertinent to CV programming are shown. Complete terminal strip details are provided in the appropriate power supply Operating and Service Manual. Most of the supplies are programmed using the connections illustrated in Figure 3-7. The specific connections for each supply are tabulated on the diagram.

3-47 Special Protection Circuit. As indicated on Figure 3-7, some of the supplies contain a special protection circuit which must be considered when programming with the 59501A. The supplies affected are models 6256B through 6274B, 6282A, 6285A, 6286A, 6290A, 6291A, and 6296A. Down programming the output voltage of these supplies may activate the special protection circuit. When this occurs, the power supply's load cannot draw more than 10% (approx.) of rated output current until the protection circuit resets. If it is desired to program the output voltage down to a lower value without the need to draw full output current, the reset time is not important. The reset time can take from 500msec to 6 seconds depending upon the particular model, the load, and the starting and the ending voltage values. For example, the actual output voltage of a 6264B supply takes only 80msec for its output to go from 20 volts down to .1% (20 millivolts), but it will be about 800 milliseconds before the circuit resets allowing the full output current to be supplied to the load. Additional information concerning this protection circuit is provided in HP-IB/ Power Supply Guide, HP Part No. 5952-3990.

3-48 Special Option J30. An additional circuit, designated special Option J30, is required when CV programming models 6427B through 6448B and 6466C through 6483C. The Option J30 circuit is a voltage-to-current converter and is required because the 59501B is essentially a constant voltage source. The above supplies utilize current sources in their programming networks. The programmable 0 – 10V output of the 59501B is connected to the Option J30 input terminals (+ and –) on the rear of the supply as shown in Figure 3-10. One characteristic of the J30 converter is that if its input is open circuited, the output of the power supply will rise to about 25% of its rating. With the 59501B connected, the open circuit condition is prevented because a protection circuit in the 59501B presents a low impedance to the J30 input when ac power is removed from the 59501B (see paragraph 4-13).

3-49 If the Option J30 power supply's front panel VOLTAGE controls are left connected in the circuit, they must be set to maximum resistance (fully CW). If they are rotated CCW, the output of the supply will be decreased for all programming voltage received from the 59501B. As indicated on Figure 3-10, the user may disable the front panel VOLTAGE controls and connect the 59501B's POWER SUPPLY FULL SCALE ADJUST in their place. Refer to the applicable power supply's Operating and Service Manual for additional connection information.

NOTE: The dotted line connections represent jumpers which must be removed. All other jumpers must be installed.

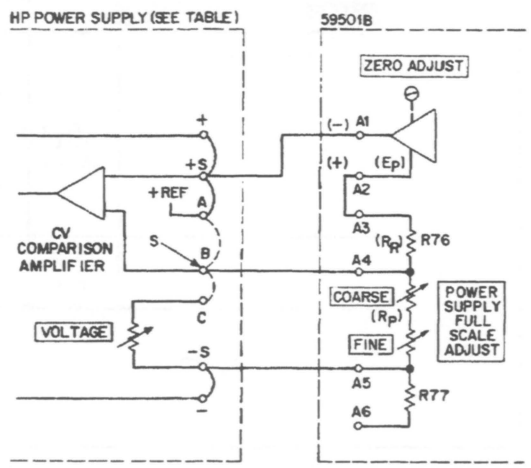

MODEL NO.	VOLTAGE PROG TERMS A	B	C	REMARKS
6002A	A3	A2	A1	IF THE 6002A IS EQUIPPED WITH OPTION 001, MODE SWITCH ON 6002A MUST BE SET TO CC OR LOCAL.
6101A, 02A, 06A	A4	A5	A6	REMOVE JUMPER BETWEEN A8 AND –S (POWER SUPPLY TERMINAL A8 IS NOT SHOWN ON THE CONNECTION DIAGRAM). PRECISION POWER SUPPLIES: ACCURACY IS SIGNIFICANTLY REDUCED WHEN PROGRAMMING WITH 59501B.
6104A, 05A, 14A, 15A	A2	A1	A3	PRECISION POWER SUPPLIES: ACCURACY IS SIGNIFICANTLY REDUCED WHEN PROGRAMMING WITH 59501B.
6111A, 12A, 13A, 16A	A4	A5	A4	REMOVE JUMPER BETWEEN A8 AND –S (POWER SUPPLY TERMINAL A8 IS NOT SHOWN ON THE CONNECTION DIAGRAM) PRECISION POWER SUPPLIES: ACCURACY IS SIGNIFICANTLY REDUCED WHEN PRGMING WITH 59501B.
6200C, 04B, 05C, 06B, 20B	A7	A6	A8	DUAL RANGE UNITS. FRONT PANEL RANGE SWITCH MUST BE SET TO DESIRED OPERATING VOLTAGE. ALSO A CAPACITOR IS REQUIRED BETWEEN TERMINALS A6 AND –S TO MAINTAIN PARD PERFORMANCE. REFER TO APPLICABLE O & S MANUAL PARTS LIST AND USE THE SAME VALUE FOR THE CAPACITOR AS THAT LISTED FOR C1.
6201B, 02B, 03B, 07B, 20B, 24B, 26B, 53A, 55A, 81A, 84A, 89A, 94A, 99A	A7	A6	A8	A CAPACITOR IS REQUIRED BETWEEN TERMINALS A6 AND –S TO MAINTAIN PARD PERFORMANCE. REFER TO APPLICABLE O & S MANUAL PARTS LIST AND USE THE SAME VALUE FOR THE CAPACITOR AS THAT LISTED FOR C1.
6209B	A7	A6	A8	FOR MODEL 6209B (320V OUTPUT) CONNECT –S TO TERMINAL A6 ON THE 59501B INSTEAD OF TERMINAL A5. ALSO A CAPACITOR IS REQUIRED BETWEEN TERMINALS A6 AND –S TO MAINTAIN PARD PERFORMANCE. REFER TO APPLICABLE O & S MANUAL PARTS LIST AND USE THE SAME VALUE FOR THE CAPACITOR AS THAT LISTED FOR C1.
6227B, 28B	A1	A2	A3	A 5μF CAPACITOR AND A 24Ω RESISTOR (CONNECTED IN SERIES BETWEEN TERMINALS A2 AND –S) ARE REQUIRED TO MAINTAIN PARD PERFORMANCE. SEE 6227B/6228B O & S MANUAL FOR WIRING INSTRUCTIONS.
6256B, 59B, 60B, 61B, 63B, 64B, 65B, 66B, 67B, 68B, 69B, 71B, 74B	A3	A2	A1	THESE SUPPLIES CONTAIN SPECIAL PROTECTION CIRCUITS WHICH MUST BE CONSIDERED WHEN PROGRAMMING WITH THE 59501B (SEE PARAGRAPH 3-47)
6282A, 85A, 86A, 90A, 91A, 96A	A5	A4	A3	

Figure 3-7. CV Programming Connections for HP Power Supplies with +S Common

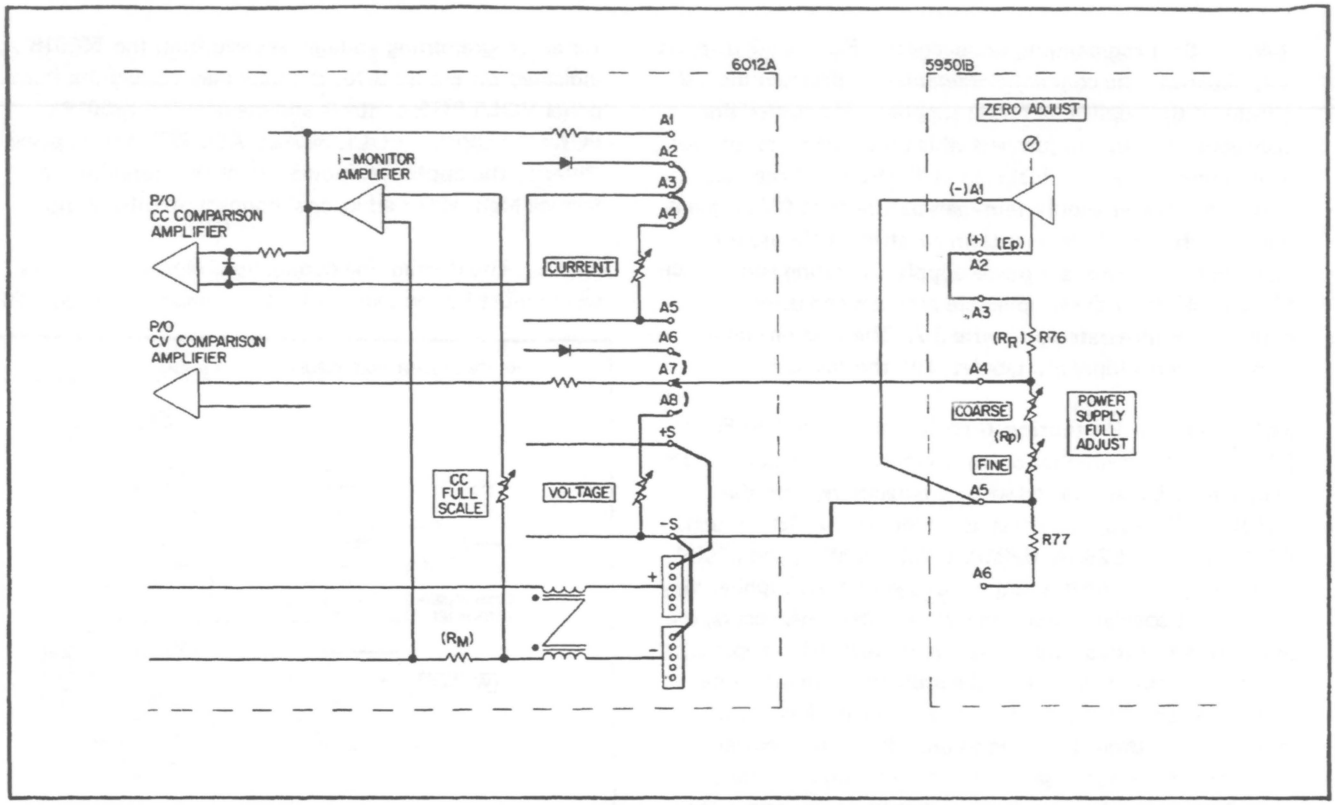

Figure 3-8. CV Programming Connections for HP Power Supply Model 6012A

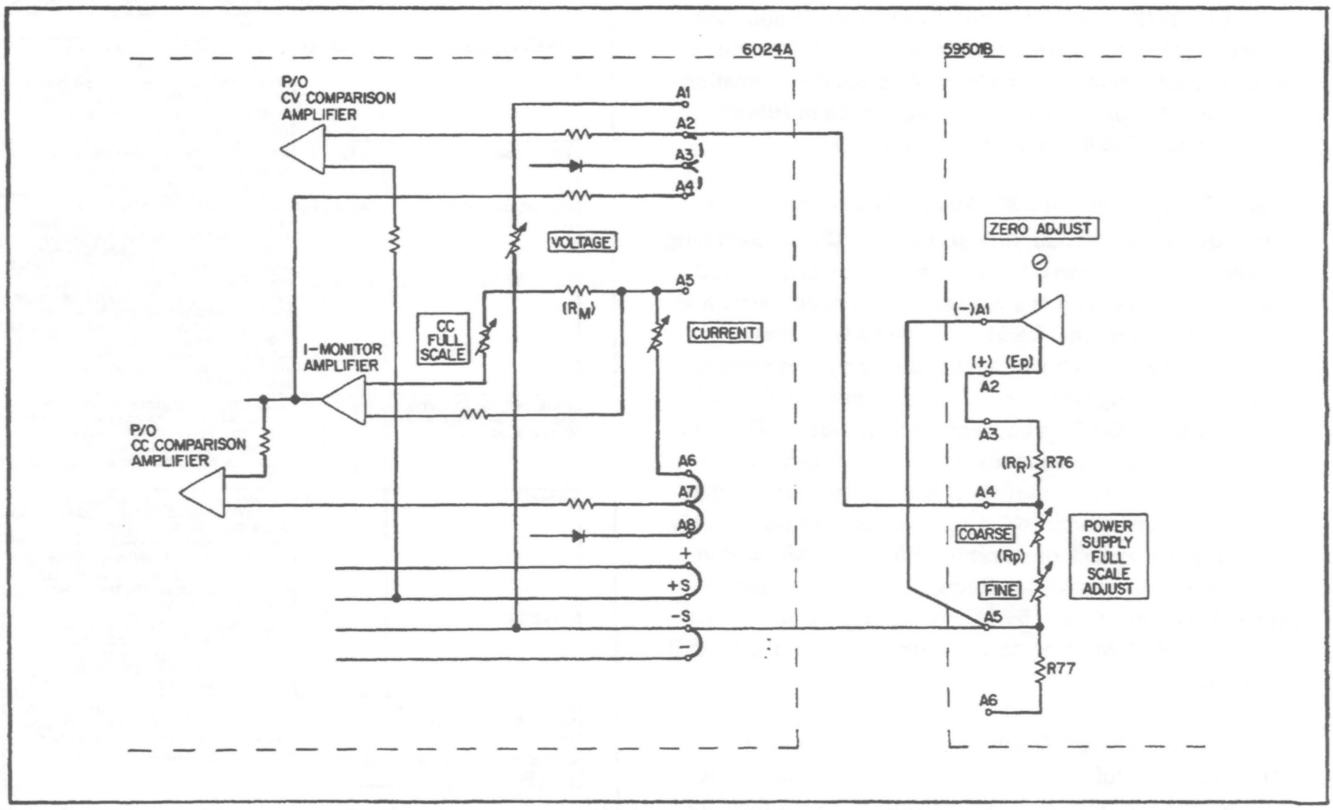

Figure 3-9. CV Programming Connections for HP Power Supply Model 6024A

NOTE: The dotted line connections represent jumpers which must be removed. All other jumpers must be installed.

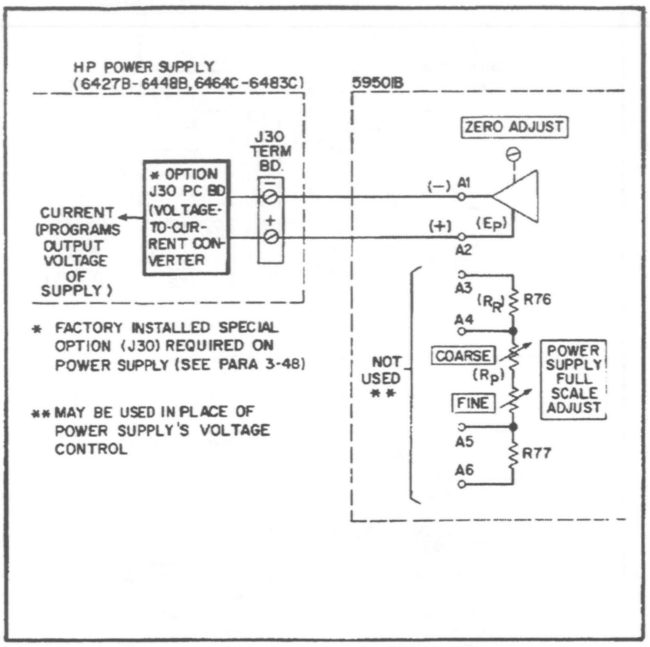

Figure 3-10. CV Programming Connections for HP Power Supply Models 6427B-6448B and 6466C-6483C

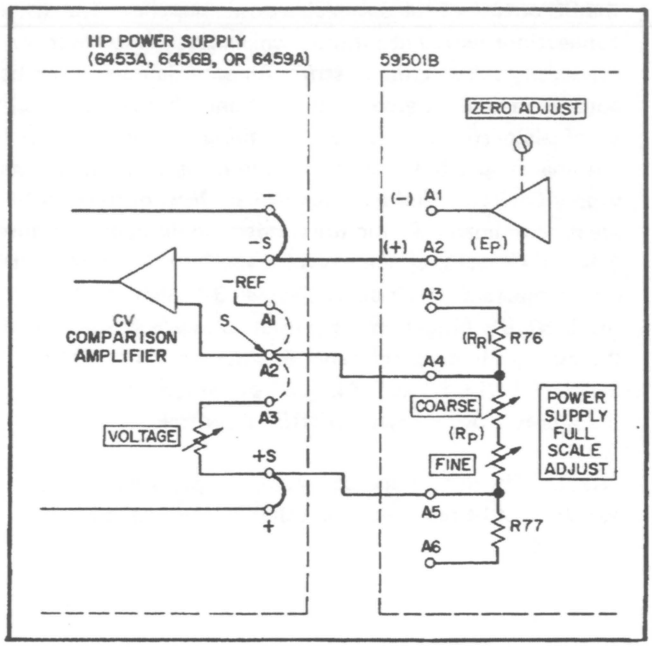

Figure 3-11. CV Programming Connections for HP Power Supply Models 6453A, 6456B, and 6459A

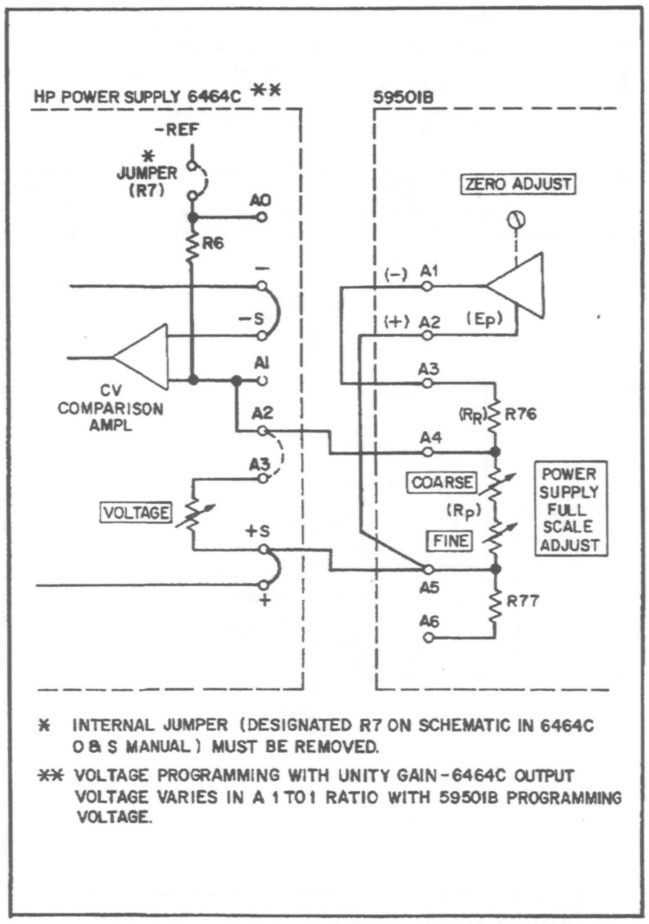

Figure 3-12. CV Programming Connections for HP Power Supply Model 6464C

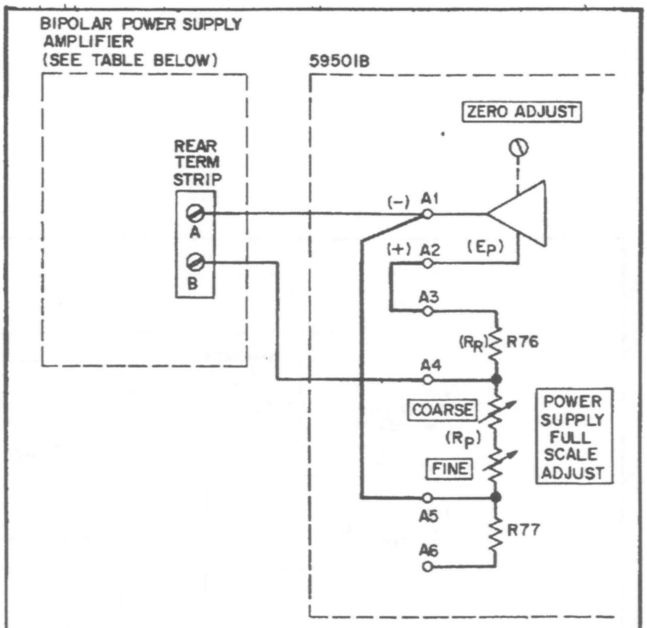

MODEL NO.	AMPLIFIER INPUT TERMS		REMARKS
	A	B	
6823A, 24C	CS	IN	SET FRONT PANEL MODE SWITCH TO AMPLIFIER.
6825A, 26A, 27A	A2	A1	SET FRONT PANEL MODE SWITCH TO VAR GAIN AMP. SET RANGE SWITCH TO DESIRED OUTPUT RANGE.

Figure 3-13. CV Programming Connections for Bipolar Power Supply Amplifiers 6423A, 6824C, 6825A-27A

3-50 CC Programming Connections. Figures 3-14 through 3-20 illustrate the connections required to program the CC output of the applicable power supplies. The dotted connections represent jumpers which must be removed on the supply's rear terminal strip. All other jumpers must be connected as illustrated. Note that only those power supply terminals pertinent to CC programming are shown. Complete terminal strip details are provided in the appropriate power supply Operating and Service manual. Most of the supplies are programmed utilizing the connection diagram of Figure 3-14. The specific connections for each supply are tabulated on the diagram. In all cases (Figures 3-14 through 3-20), the 59501B's programming output voltage is substituted for the supply's internal reference and the 59501B's POWER SUPPLY FULL SCALE ADJUST potentiometers replace the supply's front panel CURRENT control.

NOTE: The dotted line connections represent jumpers which must be removed. All other jumpers must be installed.

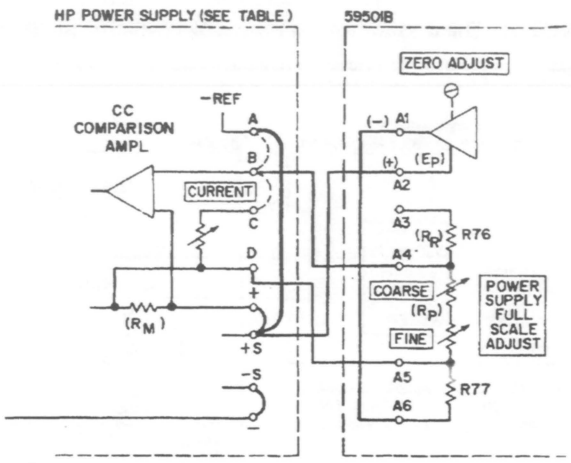

MODEL NO	CUR PROG TERMINALS			
	A	B	C	D
6002A *	A7	A4	A5	A6
6200C, 01B, 02B, 03B, 07B, 09B, 20B, 24B, 26B	A4	A1	A3	A5
6227B, 28B	A5	A6	A7	A4
6253A, 55A	A4	A1	A3	A5
6256B, 59B, 60B, 61B, 63B 64B, 65B, 66B, 68B, 69B, 71B, 74B **	A7	A6	A5	A4
6281A, 84A, 89A, 94A, 99A	A4	A1	A3	A5
6282A, 85A, 86A, 90A, 91A, 96A	A8	A1	A6	A7

* IF THE 6002A IS EQUIPPED WITH OPTION 001, THE MODE SWITCH ON THE 6002A MUST BE SET TO CV OR LOCAL.

** IN THESE SUPPLIES A1 AND A3 OF THE 59501B ARE JUMPERED TOGETHER, NOT A1 AND A6.

Figure 3-14. CC Programming Connections for HP Power Supply Models with +S Common

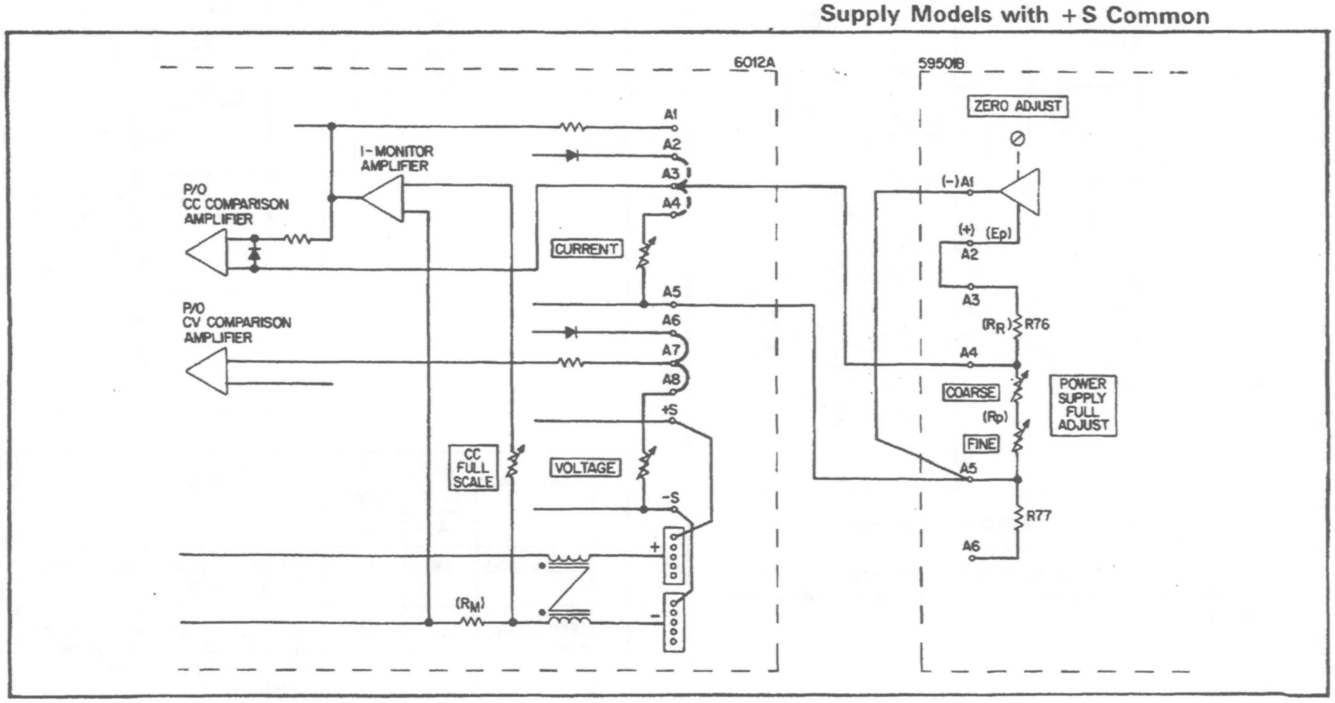

Figure 3-15. CC Programming Connections for HP Power Supply Model 6012A

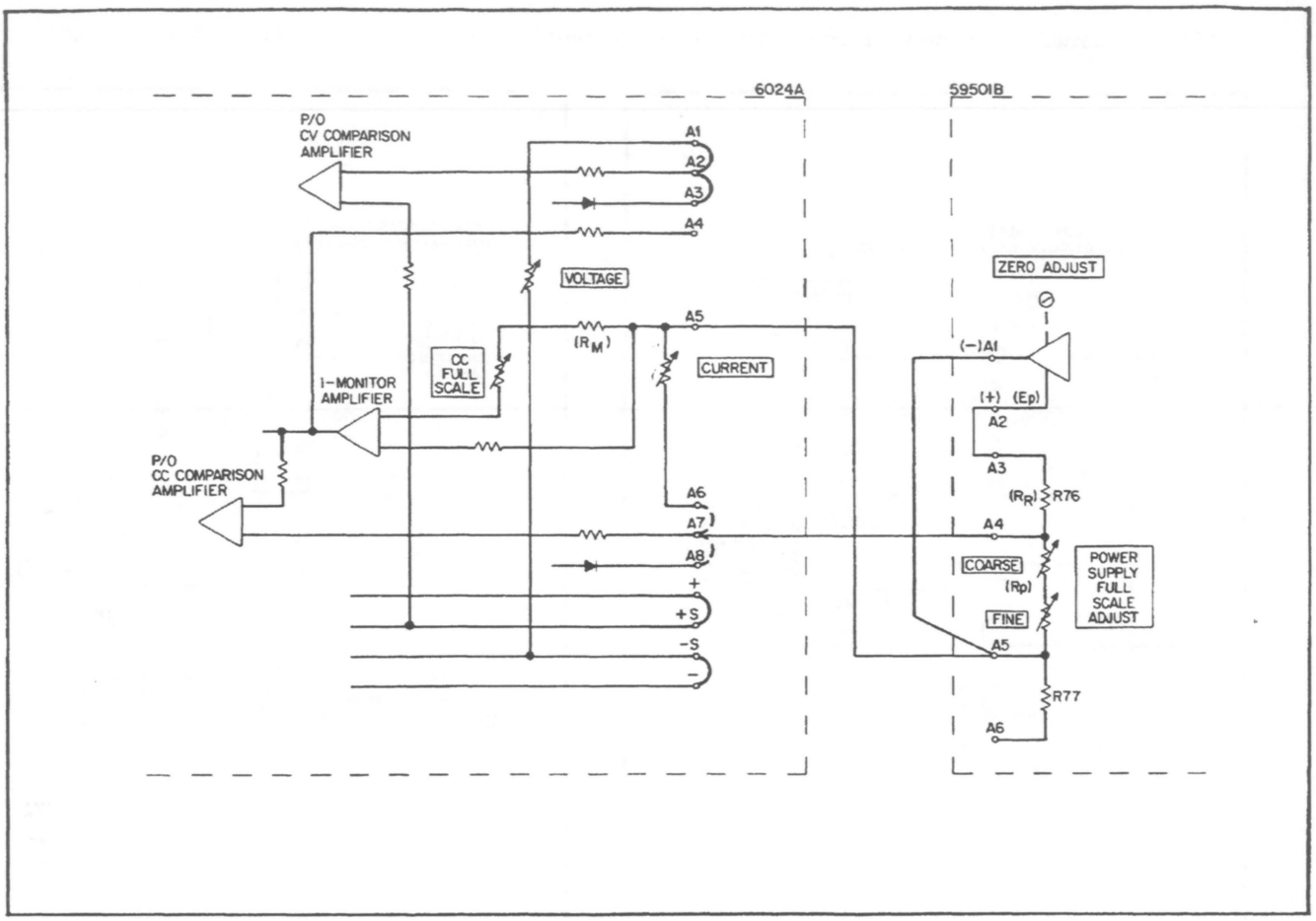

Figure 3-16. CC Programming Connections for HP Power Supply Model 6024A

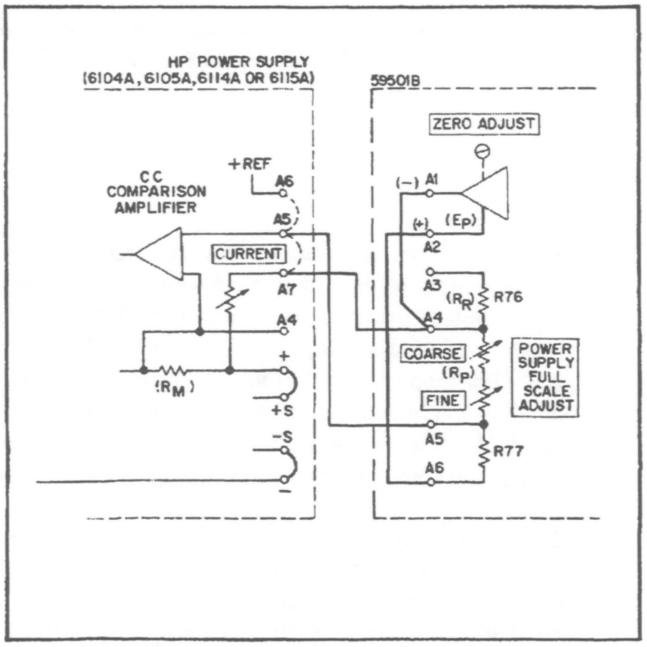

Figure 3-17. CC Programming Connections for HP Power Supply Models 6104A, 6105A, 6114A, and 6115A

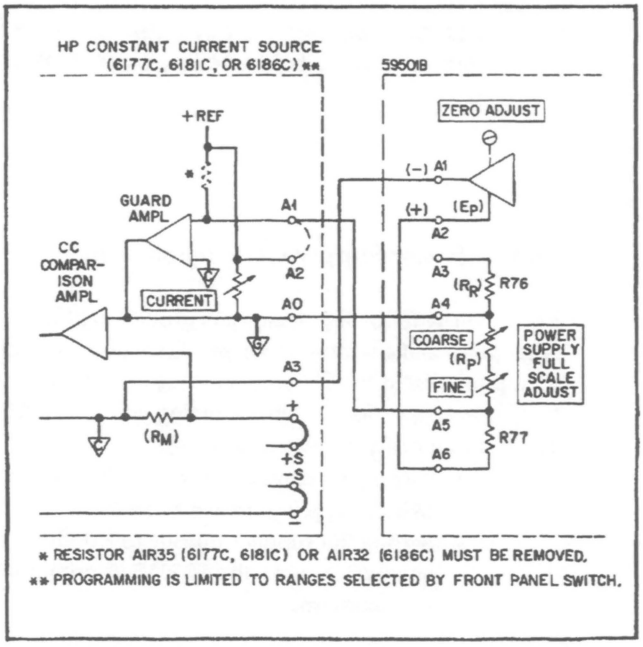

* RESISTOR AIR35 (6177C, 6181C) OR AIR32 (6186C) MUST BE REMOVED.

** PROGRAMMING IS LIMITED TO RANGES SELECTED BY FRONT PANEL SWITCH.

Figure 3-18. CC Programming Connections for HP Constant Current Sources 6177C, 6181C, 6186C

NOTE: The dotted line connections represent jumpers which must be removed. All other jumpers must be installed.

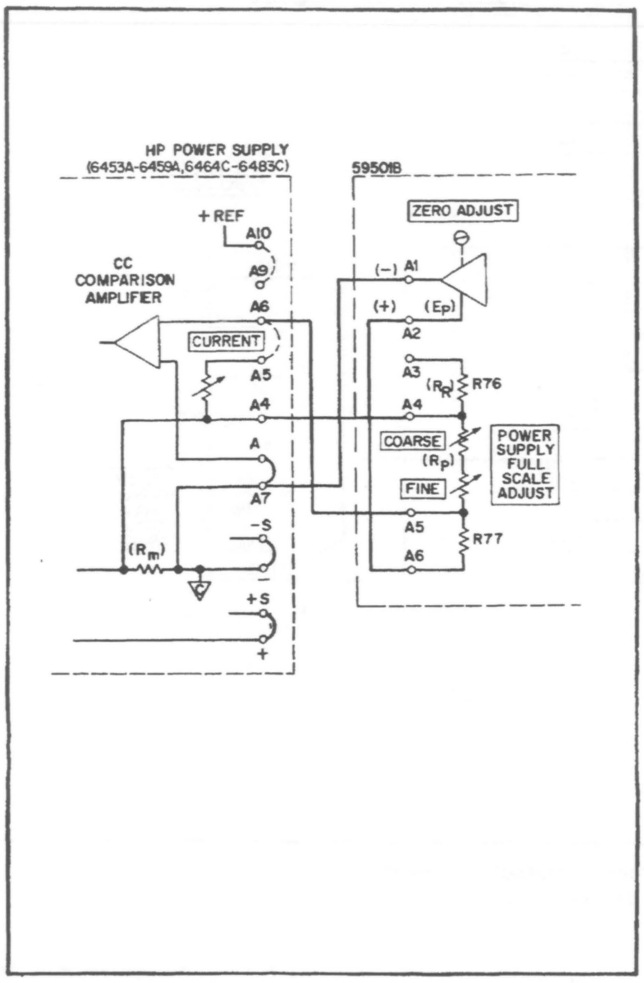

Figure 3-19. CC Programming Connections for HP Power Supply Models 6453A-6459A, 6464C-6483C

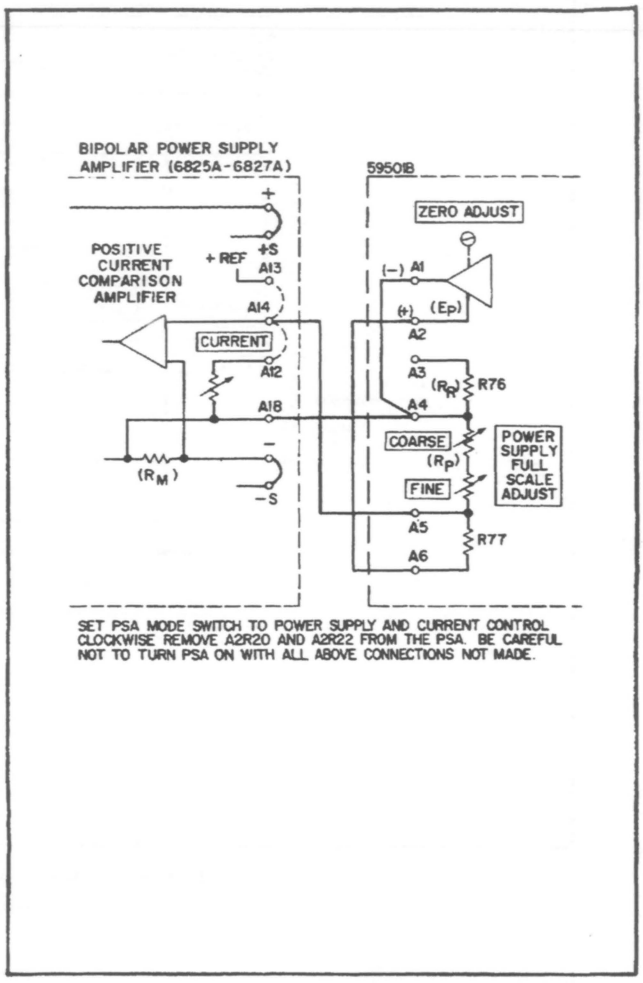

Figure 3-20. Positive CC Programming Connections for BPS/A's 6825A-6827A

3-51 Power Supply CV Programming

3-52 The following paragraphs provide calibration procedures and a sample program which are applicable to all supplies listed for CV programming in Table 3-1. Calibrating a supply for CV programming with the 59501B consists essentially of two adjustments:

1. Setting the supply's output to 0V when the 59501B is programmed to zero.
2. Setting the supply's output to a desired maximum value when the 59501B is programmed to maximum.

3-53 The maximum desired power supply output can be set to any value within the rating of the supply. For example, if only 20V maximum is required for a model 6266B supply (40V rating), the 6266B output range should be calibrated for 0V to 20V. Since the 59501B is programmable in 999 steps (magnitude digits 000-999), resolution is 20/999 (about 20mV) in the high range and 2/999 (about 2mV) in the low range. If the supply is calibrated for the full 40V rating, the resolution is 40mV (approx.) even though the supply would never be programmed above 20V.

3-54 Note that for a 20V full scale output, it is usually better to calibrate the full scale setting to 99.9% of 20V or 19.98V. The reason for this is that the resolution will be 19.98/999 or exactly 20mV per step. However, if it is imperative to calibrate the output to exactly 20V, the resolution is 20/999, or 20.02002mV per step. Thus, the

user must determine the importance of having a round number for resolution when writing programs.

3-55 Calibration. To calibrate a 59501B/power supply combination for CV operating, proceed as follows:

3-56 Test Setup.

a. Connect 59501B to an HP-IB controller.
b. Connect 59501B to power supply (CV programming), see Table 3-1.
c. Connect DVM between +S and −S terminals on the power supply.
d. On 59501B, set mode switch to UNIPOLAR and turn POWER SUPPLY FULL SCALE ADJUST (COARSE and FINE) fully CCW. Also, if power supply has a front panel CURRENT control, set it to mid-range (approx.)

3-57 Calibration Procedure.

a. Apply power to the controller, the 59501B, and the power supply. Allow 30-minute warm-up.
b. With the power supply's output terminals (+ and −) open circuited, program the 59501B to maximum high range "2999."
c. Adjust POWER SUPPLY FULL SCALE ADJUST (COARSE and FINE) on 59501B for desired maximum output voltage (or 99.9% of desired max., see paragraph 3-54) using the DVM.
d. Program 59501B to zero output "2000."
e. Set ZERO ADJUST on 59501B for 0.000 reading on DVM.
f. Program 59501B to "2999" and set POWER SUPPLY FULL SCALE FINE ADJUST on 59501B for desired maximum output voltage. If necessary, use D/A FULL SCALE ADJUST to obtain the required resolution.

NOTE

If the supply has a front panel CURRENT control, perform the following steps.

g. Program 59501B to zero output "2000". Connect a short across supply's output terminals.
h. Program 59501B to "2999" and adjust the supply's front panel CURRENT control for the desired maximum output current. If a load change causes this current limit to be exceeded, the supply automatically crosses over to constant current operation at this preset current limit and the output voltage drops proportionally. If desired, the front panel CURRENT control can be disabled and replaced with a fixed resistor of appropriate value (see applicable power supply Operating and Service Manual).
i. Program "2000". Remove short from supply's output terminals and connect load.

3-58 Sample Program. A sample program for controlling power supply CV outputs is given in example 4. The program is written specifically for a 9825A calculator but could be modified for use with other calculators. The program contains calibration and setup routines and allows the operator to input specific voltage values on the keyboard. The program also includes automatic changing of ranges and error messages that indicate when the voltage requested by the operator exceeds the maximum value available or when a negative voltage is requested. A line-by-line explanation is given after the program. Programming fundamentals are provided in paragraphs 3-17 through 3-34.

3-59 The sample program requires use of the General I/O and Extended I/O ROM's. After keying in the program, press RUN on the calculator. All operations required to complete the program are given on the calculator display. After each operation is completed, press CONTINUE. The operator enters the maximum desired output voltage value (e. g. 20) when "Enter maximum output voltage" appears on the display. The program automatically uses 99.9% of this value (e. g. 19.98) to calibrate the supply (see paragraph 3-54). After connecting the load, the operator enters the desired output voltage (line 13) on the keyboard and press CONTINUE. If it is desired to recalibrate the power supply (change the maximum desired output voltage) press STOP and then press RUN.

NOTE

The program listings provided in the following examples are taken from an HP 9866B printer. These listings are provided only because 9866B printouts are easier to read than printouts from the 9825A's internal strip printer. Also, a check sum is provided at the end of each 9825A program listing. Make sure that the check sum at the end of your keyed-in program matches the check sum provided in the listing.

Example 4. 9825A Sample Program, Constant Voltage - Unipolar Mode

```
0: "UNIPOLAR Power Supply Voltage Output":
1: dsp "Set 59501B to UNIPOLAR";stp
2: dsp "Turn PSFS ADJ fully CCW";stp
3: ent "Enter maximum output voltage",E
4: E/1000→D;E-D→E
5: cmd 7,"?U&","2999"
6: dsp "Set PSFS ADJ for",E;stp
7: cmd 7,"?U&","2000"
8: dsp "Set ZERO ADJ for 0.000";stp
9: cmd 7,"?U&","2999"
10: dsp "Adjust PSFS FINE ADJ for ",E;stp
11: cmd 7,"?U&","2000"
12: dsp "Connect load to supply";stp
13: ent "Enter desired output voltage",V
14: if V<0;dsp "No negative voltages";wait 3000;gto 13
15: if V>E;dsp "Voltage too high";wait 3000;gto 13
16: if V<=.1*E;1000+int(V/.1D+.5)→N;gto 18
17: 2000+int(V/D+.5)→N
18: fmt 1,f4.0;wrt 706.1,N;gto 13
19: end
*10217
```

COMMAND STATEMENT (SEE PARA 3-32)

FORMAT AND WRITE STATEMENTS (SEE PARA 3-36)

CHECK SUM

Explanation:

1-2: Setup instructions.

3: User enters desired maximum output voltage on keyboard (e. g. 10, 20, 50, 100, etc.).

4: Resolution is calculated and the maximum desired output is changed to 99.9% of voltage entered in line 3 (see paragraph 3-54).

5-10: Calibration routine using ZERO ADJUST and POWER SUPPLY FULL SCALE ADJUST (COARSE and FINE) controls on 59501B front panel.

11-12: Output is programmed to zero. Load is connected to power supply's output terminals (see applicable power supply Operating and Service manual).

13: User inputs desired voltage on keyboard.

14-15: If the voltage requested (line 13) is negative or too high, the appropriate error message appears on the display for three seconds and then the program returns to line 13.

16-17: Proper range is selected and correct data word value (N) is calculated for the voltage requested.

18: Data word (N) representing the desired output voltage is sent to the 59501B. Format f4.0 deletes leading spaces and z suppresses the carriage return/line feed codes (see paragraph 3-34).

3-60 BPS/A CV Programming

3-61 The following paragraphs provide calibration procedures and a sample program for bipolar power supply/amplifier (BPS/A) models 6824A through 6827A. Calibration consists of setting the BPS/A's desired bipolar output range when the 59501B is programmed to its maximum negative and positive limits. The desired bipolar range can be set to any value within the rating of the particular BPS/A. For example, the maximum output range of model 6826A is from –50V to +50V. To calibrate this range, the –50V output is calibrated with the 59501B programmed to "2000" and the +50V output is calibrated with the 59501B programmed to "2999". Since the 59501B is programmable in 999 steps, resolution is approximately 100mV (100/999). Note if it is desired to have a resolution equal to exactly 100mV, the positive limit is set to +49.9V instead of +50V. For this range (–50V to +49.9V), the resolution is exactly 100mV (99.9V/999).

3-62 Calibration. To calibrate a 59501B/BPS/A combination for CV operation proceed as follows:

3-63 Test Setup.

a. Connect 59501B to an HP-IB controller.
b. Connect 59501B to BPS/A as shown in Figure 3-11.
c. Connect DVM between +S and –S terminals (models 6825A-6827A) or between OS and CS terminals (models 6823A, 6824A). Connect DVM common to –S or OS terminal.
d. On 59501B, set mode switch to BIPOLAR.
e. On BPS/A, set mode switch to VAR GAIN AMP (models 6825A-6827A) or AMPLIFIER (models 6823A, 6824A). Also, turn VOLTAGE (Gain) controls on BPS/A fully CCW.
f. On BPS/A models 6825A through 6827A only, set RANGE switch to desired output range and set CURRENT control to mid-range (approx.).

3-64 Calibration Procedure.

a. Apply power to the controller, the 59501B, and the BPS/A. Allow 30-minute warm-up.
b. With the BPS/A's output terminals open circuited, program the 59501B to maximum positive output "2999".
c. Adjust VOLTAGE control on BPS/A and D/A FULL SCALE ADJUST on 59501B for the desired maximum positive output (or 99.9% of desired max., see paragraph 3-60) using DVM.
d. Program 59501B to maximum negative output "2000".
e. Set ZERO ADJUST on 59501B for the desired maximum negative output from BPS/A using DVM.
f. Program 59501B to maximum positive output "2999".
g. Set D/A FULL SCALE ADJUST for the desired maximum positive output from BPS/A.
h. Repeat steps d through g until best possible accuracy is achieved.

NOTE

The following steps apply only when calibrating BPS/A models 6825A-6827A.

i. Program 59501B to "2500". Connect a short across BPS/A's output terminals.
j. Program 59501B to "2999" and adjust the BPS/A's front panel CURRENT control for the desired maximum output current. If a load changes causes this current limit to be exceeded, the supply automatically crosses over to constant current operation at this preset current limit and the output voltage drops proportionally.
k. Program "2500". Remove short from output terminals and connect load.

3-65 Sample Program. Example 5 is a sample program using a 9825A calculator. The program contains calibration and setup routines and allows the operator to input specific positive or negative voltage values on the keyboard. The program also includes automatic changing of ranges and an error message if the voltage requested by the operator exceeds the maximum bipolar value available. A line-by-line explanation is given after the program. Programming fundamentals are provided in paragraphs 3-17 through 3-34.

3-66 The sample program in example 5 requires use of the General I/O and Extended I/O ROM's. After keying in the program press RUN on the calculator. All operations required to complete the program are given on the calculator display. After each operation is completed, press CONTINUE.

Example 5. 9825A Sample Program, Constant Voltage - Bipolar Mode

```
0: "BIPOLAR Power Supply Voltage Output":
1: fxd 3
2: dsp "Set 59501B to BIPOLAR";stp
3: dsp "Turn VOLT ADJ fully CCW";stp
4: ent "Enter max neg output voltage",M;abs(M)→M
5: 2M/1000→D;M-D→P
6: cmd 7,"?U&","2999"
7: dsp "Set VOLT & D/A FS for",P;stp
8: cmd 7,"?U&","2000"
9: ent "Enter DVM reading",X;abs(X)→X
10: (M+X)/2→Y
11: dsp "Set ZERO ADJ for",-Y;stp
12: cmd 7,"?U&","2999"
13: dsp "Readjust D/A FS ADJ for",P;stp
14: cmd 7,"?U&","2500"
15: dsp "Connect load to BPS/A";stp
16: ent "Enter desired voltage(+ or -)",V
17: if V<-M or V>P;dsp "Voltage too high";wait 3000;gto 16
18: if V<=.1P and V>=-.1M;1000+int((V+.1M)/.1D+.5)→N;gto 20
19: 2000+int((V+M)/D+.5)→N
20: fmt 1,f4.0,z;wrt 706.1,N;gto 16
21: end
*28334
```

Explanation:

1: Sets fixed point format with three digits to the right of the decimal. This allows for better accuracy in the adjustments specified in lines 7 and 11.

2-3: Setup instructions.

4-13: Calibration routine using VOLTAGE (GAIN) control on BPS/A and the ZERO and D/A FULL SCALE ADJUST controls on the 59501B. Note that in line 10 an average value is calculated so that the adjustment can be completed in the minimum number of steps.

14-15: BPS/A output is programmed to zero. Load is connected to BPS/A output terminals.

16: User inputs desired output voltage (+ or –) on the keyboard.

17: If voltage requested (line 16) is too high, "Voltage too high" appears on the display for three seconds, and then the program returns to line 16.

18-19: Proper range is selected and correct data word value (N) is calculated to represent the voltage requested.

20: Data word (N), representing the requested output voltage (+ or –), is sent to the 59501B. Format f4.Ø deletes leading spaces and z suppresses the carriage return/line feed characters. If leading spaces are not deleted and the CR/LF characters are not suppressed, the output will go to an undesired value (see paragraph 3-34).

3-67 CC Programming

3-68 The following paragraphs provide calibration procedures which are applicable to all power supplies listed for CC programming in Table 3-1. Calibrating the supply for CC programming with the 59501B consists essentially of two adjustments:

1. Setting the supply's output current to zero when the 59501B is programmed to zero.
2. Setting the supply's output current to a desired maximum value when the 59501B is programmed to maximum.

3-69 Calibration. To calibrate a 59501B/power supply combination for CC programming, proceed as follows:

3-70 Test Setup.

a. Connect 59501B to an HP-IB controller.
b. Connect 59501B to power supply (CC programming), see Table 3-1.
c. Connect a resistive load in series with an external current monitoring resistor across supply's output terminals. Refer to Section V of applicable Operating and Service manual for resistor values, power ratings, and CC test setup diagram, etc. Connect a DVM across the current monitoring resistor.
d. On 59501B, set mode switch to UNIPOLAR and turn POWER SUPPLY FULL SCALE ADJUST (COARSE and FINE) fully CCW.
e. On power supply, set front panel VOLTAGE control fully CW.

3-71 Calibration Procedure.

a. Apply power to the controller, the 59501B and the power supply. Allow 30-minute warm-up.
b. Program 59501B to "2999" and set POWER SUPPLY FULL SCALE ADJUST (COARSE and FINE) for desired maximum output current. (Voltage reading on DVM must be converted to the equivalent output current).
c. Program 59501B to "2000" and set ZERO ADJUST on 59501B for zero output current. Note that for power supply models 6427-6483, zero current may not be attainable. When calibrating the CC output of one of these supplies, choose a convenient point, e. g. 10% or 20% of maximum output and set ZERO ADJUST to obtain this value. Data words "2100" and "2200" correspond to the 10% and 20% output points, respectively.
d. Program 59501B to "2999" and set POWER SUPPLY FULL SCALE FINE ADJUST on 59501B for desired maximum output current. If necessary use D/A FULL SCALE ADJUST to obtain the required resolution.
e. Turn off supply and open output terminals. Turn on supply.
f. Adjust power supply's VOLTAGE control for the desired maximum output voltage. If a load change causes this voltage limit to be exceeded, the supply automatically crosses over to constant voltage operation at this voltage limit point and the output current drops proportionally. If desired, the front panel VOLTAGE control can be disabled and replaced with a fixed resistor of proper value (see applicable power supply Operating and Service manual).

3-72 Sample Program. The sample program provided in example 4 can easily be modified for CC programming by substituting I (current) for V (voltage) and by monitoring the output current using the test setup of paragraph 3-70.

3-73 USING 59501B AS A LOW LEVEL DC SIGNAL SOURCE

3-74 When used as a low level dc signal source, 59501B output terminals A1 and A2 are connected directly to the user's device. In this application, power supply programming network terminals A3 through A6 are normally not used. As described previously, two programmable output ranges are available in the selected operating mode (UNIPOLAR or BIPOLAR). The output ranges available at terminals A1 and A2 are as follows:

Range	Unipolar	Bipolar
High	0 to 9.99V	−10 to 9.98V
Low	0 to 0.999V	−1 to +0.998V

3-75 Unipolar Mode

3-76 Calibration. The ZERO ADJUST allows the output to be adjusted to zero (±250 millivolts) when the 59501B is programmed to zero (2000). The D/A FULL SCALE ADJUST allows the output to be adjusted to 9.99V (±5%) when the 59501B is programmed to maximum (2999). The 59501B is normally calibrated to provide a unipolar output range from 0V to 9.99V. The reason for this is that the 59501B is programmable in 999 steps and using this range results in a round number for resolution (voltage change per step). For example, in the high range resolution is 9.99V/999 or 10mV per step. If the output is set to 10V, resolution is 10/999 or 10.01001mV per step. Calibration procedures for operating in the unipolar mode are provided in paragraph 5-29.

3-77 **Sample Program.** A sample program (9825A calculator) for controlling the unipolar output of the 59501B is given in example 6. The program includes a calibration routine and allows the operator to input specific voltage values on the keyboard. The program also provides automatic range changing and error messages that indicate if the voltage value requested exceeds 9.99V or if a negative voltage is requested. A line-by-line explanation is given after the program. Programming fundamentals are provided in paragraphs 3-29 through 3-34.

3-78 The sample program requires use of the General I/O and Extended I/O ROM's. After keying in the program, press RUN. All operations required to complete the program are given on the calculator display. After each operation is completed, press CONTINUE.

NOTE

The program listings provided in the following examples are taken from an HP 9866B printer. These listings are provided only because 9866B printouts are easier to read than printouts from the 9825A's internal strip printer. Also, a check sum is provided at the end of each 9825A program listing. Make sure that the check sum at the end of your keyed-in program matches the check sum provided in the listing.

Example 6. 9825 Sample Program, 59501B Unipolar Output

```
0: "UNIPOLAR Voltage Output;59501A":
1: dsp "Set 59501B to UNIPOLAR";stp
2: cmd 7,"?U&","2000"
3: dsp "Set ZERO ADJUST for 0V";stp
4: cmd 7,"?U&","2999"
5: dsp "Set D/A FS ADJ for 9.99V";stp
6: ent "Enter desired V(0 to 9.99V)",V
7: if V<0;gto 12
8: if V>9.99;gto 14
9: if V>.999;gto 16
10: .001→D;1000→R
11: gto 17
12: dsp "No Negative Voltages"
13: wait 3000;gto 6
14: dsp "Voltage Too High"
15: wait 3000;gto 6
16: .01→D;2000→R
17: R+int(V/D+.5)→N
18: fmt 1,f4.0,z;wrt 706.1,N;gto 6
19: end
*10751
```

Explanation:

1: Setup instructions.

2-5: Calibration instructions using ZERO ADJUST and D/A FULL SCALE ADJUST on 59501B.

6: User inputs desired output voltage (0 to 9.99) on keyboard.

7-17: Proper range is selected and correct data word value (N) is calculated to represent voltage requested. If the voltage requested (line 6) is too high or negative, the appropriate error message appears on the display for three seconds and, then the program returns to line 6.

18: Data word (N) is sent to the 59501B. Format f4.0 deletes leading spaces and z suppresses the carriage return/line feed characters. If leading spaces are not deleted and the CR/LF characters are not suppressed, the output will go to an undesired value (see paragraph 3-34).

3-79 Bipolar Mode

3-80 Calibration. The ZERO ADJUST allows the negative limit to be set to −10V when the 59501B is programmed to zero (2000). The D/A FULL SCALE ADJUST allows the positive limit to be set to +9.98V when the 59501B is programmed to maximum (2999). This range results in a resolution of 19.98V/999 or 20mV per programming step. Calibration procedures for operating in the bipolar mode are provided in paragraph 5-30.

3-81 Sample Program. A sample program for controlling the bipolar output of the 59501B is given in example 7. This program is similar to the unipolar mode program given in example 8 except that it allows keyboard input of bipolar voltage from −10V to +9.98V.

Example 7. 9825A Sample Program, 59501B Bipolar Output

```
0: "BIPOLAR Voltage Output;59501A":
1: fxd 3
2: dsp "Set 59501B to BIPOLAR";stp
3: cmd 7,"?U&","2999"
4: dsp "Set D/A FS for +9.980";stp
5: cmd 7,"?U&","2000"
6: ent "Enter DVM reading",X;abs(X)→X
7: (10+X)/2→Y
8: dsp "Set ZERO ADJ for ",-Y;stp
9: cmd 7,"?U&","2999"
10: dsp "Readjust D/A FS for 9.980";stp
11: ent "Enter desired output voltage",V
12: if V<-10 or V>9.98;dsp "Voltage too high";wait 3000;gto 11
13: if V<=.998 and V>=-1;1000+int((V+1)/.002+.5)→N;gto 15
14: 2000+int((V+10)/.02+.5)→N
15: fmt 1,f4.0,z;wrt 706.1,N;gto 11
16: end
*21592
```

Explanation:

1: Sets fixed point format with three digits to the right of the decimal. This allows for better accuracy when performing the adjustment specified in line 8.

2: Setup instruction.

3-10: Calibration routine using ZERO ADJUST and D/A FULL SCALE ADJUST controls on the 59501B. Note that in line 7, an average value is calculated so that the adjustment can be completed in the minimum number of steps.

11: User inputs desired output voltage (−10 to +9.98) on keyboard.

12: If the voltage requested is too high, "Voltage too high" appears on the display for three seconds, and then the program returns to line 11.

13-14: Proper range is selected and correct data word value (N) is calculated.

15: Data word (N) representing the desired positive or negative output voltage is sent to the 59501B. Format f4.0 deletes leading spaces and z suppresses carriage return/line feed characters. If leading spaces are not deleted and CR/LF characters are not suppressed, the output will go to an undesired value (see paragraph 3-34).

SECTION IV
PRINCIPLES OF OPERATION

4-1 OVERALL DESCRIPTION

4-2 The 59501B provides a unipolar or bipolar output voltage in response to digital data received on the HP-IB. As stated previously, the 59501B can be used (in conjunction with an HP-IB controller) as a power supply programmer or as a low level dc signal source. Figure 4-1 is a block diagram illustrating the major circuits within the 59501B. For simplification, the 59501B's bias voltage supplies and power-on preset circuit are not shown on the block diagram. The 59501B's circuits are shown in their entirety on the main schematic (Figure 7-3 at the rear of the manual. The functional circuit designations are the same on both the block diagram and the schematic so that the two diagrams can be correlated. As shown in Figure 4-1, the major circuits of the 59501B consist of digital processing circuits, a digital-to-analog converter, and analog amplifier circuits.

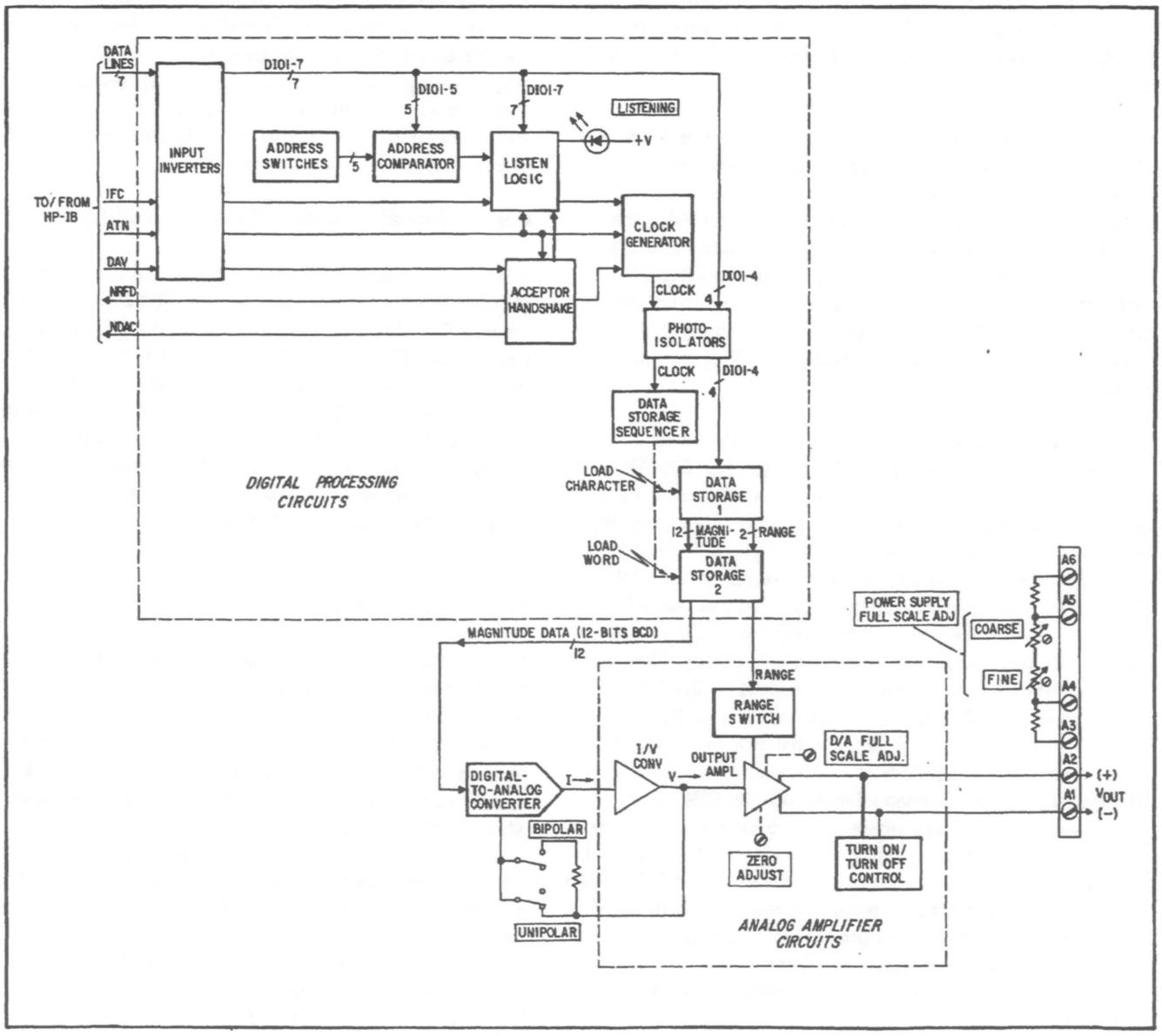

Figure 4-1. 59501B Block Diagram

4-3 Digital Processing Circuits

4-4 The 59501B responds to the ATN (attention) and IFC (interface clear) control signals as well as the data on lines (DI01-DI07). The 59501B also receives the DAV (data valid) handshake signal from the bus and sends the NRFD (not ready for data) and NDAC (data not accepted) handshake signals to the bus. A 3-wire handshake sequence is used to control the transfer of each character on the bus. This process allows devices with different input/output speeds to be interconnected to the HP-IB. The character transfer rate automatically adjusts to the slowest device. The acceptor handshake circuit implements the 3-wire handshake cycle that occurs with each command or data character received on data lines DI01-DI07. The 59501B transfer rate is approximately 17μsec per character. The 59501B is programmed by a data word consisting of four consecutive characters (digits), thus, a data word is transferred to the 59501B in approximately 68μsec.

4-5 Data lines DI01-DI07 accommodate the 7-bits (1-character) of the ASCII code. Each character is transferred onto the bus one at a time. The state of the ATN line determines how the data lines are interpreted. The ATN line is constantly monitored by the 59501B and all other bus devices. When ATN is true, the bus devices interpret the data as instructions (commands) from the controller. The 59501B recognizes two commands: its listen address (suggested listen address is "&") and the unlisten command "?".

4-6 When ATN is true and the 59501B's listen address is placed on data lines DI01-DI07, the 59501B is enabled to function as a "listener". As shown in Figure 4-1, the data lines are applied to the address comparator and to the listen logic. The address comparator decodes the 59501B's listen address when the levels on lines DI01-DI05 match the address switch settings on the rear of the 59501B. In this case, the address switches are set to "&" (one of 31 possible address codes) which distinguishes the 59501B from the other devices connected to the bus. Thus, when the 59501B's listen address is decoded and ATN is true (command mode), the listen logic is set. For this condition, the LISTENING indicator is turned-on and the clock generator is enabled allowing the 59501B to process subsequent data words received on the bus. If the ATN line is true and an unlisten command "?" is received, the listen logic is reset. For this condition, the LISTENING indicator is turned off and the clock generator is disabled inhibiting the 59501B from processing data words. Note that the IFC signal also resets the listen logic. The IFC signal is used by the controller to terminate activity on the HP-IB.

4-7 When the ATN line is false and the 59501B is "listening" (listen logic is set), the digital processing circuits will store a data word comprised of four digits (characters) transmitted consecutively. The first digit specifies the output range (low or high) and the next three digits specify the magnitude of the output voltage within the selected range. Each digit, represented by bits DI04 (MSB)-DI01 (LSB), is transferred into data storage 1 (via input inverters and photo-isolators) during the accompanying 3-wire handshake cycle. The photo-isolators provide 600Vdc isolation between the HP-IB data lines and the 59501B's output voltage terminals (A1 and A2).

4-8 A clock pulse, generated during each handshake cycle, gates the data storage sequencer which in turn loads each digit (1-range, 3-magnitude) into the proper storage 1 latch position. After the fourth digit is loaded into data storage 1 all four digits (data word) are automatically transferred into the data storage 2 latches. The three magnitude digits are then sent to the digital-to-analog converter (DAC) while the range digit is sent to the analog amplifier circuits. The data storage 2 latches will retain this data until a new data word is transferred.

4-9 Digital-to-Analog Converter (DAC)

4-10 The DAC converts the three magnitude digits (12 bits, BCD) into an output current. The DAC output range, 0-2mA (nominal), corresponds to the BCD input range of 000-999. The DAC output current is applied to the current-to-voltage (I/V) converter in the analog amplifier circuits. The UNIPOLAR/BIPOLAR switch on the rear of the 59501B changes the feedback path between the DAC and the I/V converter so that the I/V converter provides an output range from 0 to +2.5V (nominal) in the unipolar mode and from −2.5V to +2.5V (nominal) in the bipolar mode.

4-11 Analog Amplifier Circuits

4-12 The unipolar or bipolar output of the I/V converter is applied to the output amplifier. The output amplifier provides either a high range or a low range output voltage between terminals A1 and A2. The range switch controls the gain of the amplifier so that a high range or a low range output is produced. The range switch is set to high range when a "2" is programmed and to low range when a "1" is programmed. Thus, the output amplifier provides one of the following output ranges depending upon the range digit programmed and the position of the UNIPOLAR/BIPOLAR switch:

	Low Range	High Range
UNIPOLAR:	0 to +0.999V	0 to 9.99V
BIPOLAR:	−1 to +0.998V	−10 to +9.98V

4-13 The output amplifier includes overvoltage protection and current limiting circuits to protect the 59501B and user equipment. In addition, a turn-on/turn-off control circuit clamps the output terminals at a low level when power is turned-on or off. The purpose of this circuit is to prevent transients at power turn-on and turn-off from affecting the output of the 59501B and also prevent random programming of a power supply prior to receipt of valid programming data.

4-14 The front panel ZERO ADJUST allows a zero (±250mV) output adjustment. The D/A FULL SCALE ADJUST allows setting the maximum 59501B output (±5%) in the high and low ranges.

4-15 When the 59501B is used as a power supply programmer, the POWER SUPPLY FULL SCALE ADJUST potentiometers (COARSE and FINE) allow the user to set the maximum power supply output when the 59501B is programmed to its maximum output. Power supply programming is accomplished by connecting the 59501B's output terminals to the power supply's voltage programming terminals (see Section III).

4-16 DETAILED CIRCUIT DESCRIPTION

4-17 The following paragraphs describe, in more detail, the operation of the 59501B's major circuits. Note that only those circuits not covered in sufficient detail in the preceding overall description, will be described. Throughout this discussion refer to the fold-out schematic diagram at the rear of this manual.

4-18 Power-On Preset

4-19 When power is initially applied, the preset circuit (Q3, U1, U5) generates a LO level pulse ($\overline{PON}$) which resets the listen flip-flop (acceptor handshake), and the data storage sequencer. Thus, the preset circuit ensures that the 59501B is not a "listener" and is properly initialized when power is applied.

4-20 Address Comparator

4-21 The address comparator consists of 5-bit comparator U3 and the address switches on the rear of the supply. When the levels on data lines $\overline{DI01}$-$\overline{DI05}$ match the address switch settings, U3 provides a HI level ADDRESS output to the listen logic. Note that the schematic illustrates the address switches set to the suggested listen address of "&".

4-22 Acceptor Handshake

4-23 The acceptor handshake circuit implements the 3-wire handshake cycle that occurs with each command or data character received on the bus data lines $\overline{DI01}$-$\overline{DI07}$. Unrecognized command characters (e. g., talk address) will be ignored but the handshake cycle between the controller and the 59501B will occur anyway. The 3-wire handshake lines are designated $\overline{DAV}$ (data valid), $\overline{NRFD}$ (not ready for data), and $\overline{NDAC}$ (data not accepted). The acceptor handshake circuit is enabled when the bus is in the command mode ($\overline{ATN}$ is LO) or if the 59501B is in the listen mode (listen flip-flop set) and $\overline{ATN}$ is HI (data mode). For either of the above conditions, the output of NAND gate U8-3 goes HI and NAND gate U5-6 goes LO enabling the acceptor handshake circuits. Figure 4-2 illustrates the 3-wire handshake cycle timing sequence for each character received by the 59501B in the command and data modes.

T_0: Initially the $\overline{NRFD}$ signal (J1-7) is HI (59501B is ready for data) and the $\overline{NDAC}$ signal (J1-8) is LO (data not accepted). Also $\overline{DAV}$ (J1-6) is HI (data on bus is not valid).

T_1: The source (assume controller) puts a character on the bus and indicates that the character is valid by setting $\overline{DAV}$ (J1-6) LO.

T_2: After a delay of approximately 1μsec $\overline{NRFD}$ goes LO (59501B not ready for data). Also, accept data signals, ACDS (U11-13) and $\overline{ACDS}$ (U11-4), are generated.

a. If the HP-IB is in the command mode ($\overline{ATN}$ LO), the ACDS signal gates a recognized command character (59501B's listen address "&" or unlisten command "?") which sets or resets the listen flip-flop (see paragraph 4-24).

b. If the HP-IB is in the data more ($\overline{ATN}$ HI) and the 59501B had previously been addressed to listen, the ACDS signal gates the clock generator, producing a clock pulse which loads the data character (range or magnitude) present on bus lines ($\overline{DI01}$-$\overline{DI04}$) into the appropriate storage register (see paragraph 4-31).

T_3: After approximately 15μsec, the trailing (positive) edge of the $\overline{ACDS}$ (U11-4) signal produces a negative pulse (U12-8) which sets the DAC F/F (U8-11 goes HI and U9-6 goes LO). With U9-6 LO, $\overline{NDAC}$ (J1-8) goes HI indicating that the 59501B has accepted the data.

T_4: The controller, sensing $\overline{NDAC}$ HI, sets $\overline{DAV}$ HI indicating that the data on the bus is no longer valid.

T_5: When $\overline{DAV}$ goes HI, the DAC F/F is reset (U9-6 goes HI and U8-11 goes LO) causing $\overline{NDAC}$ (J1-8) to go LO (data not accepted). Also, with $\overline{DAV}$ HI, $\overline{NRFD}$ goes HI indicating that the 59501B is ready for the next character.

T_6: With $\overline{NRFD}$ HI, the controller sets $\overline{DAV}$ LO and the next character is transferred (T2 through T5).

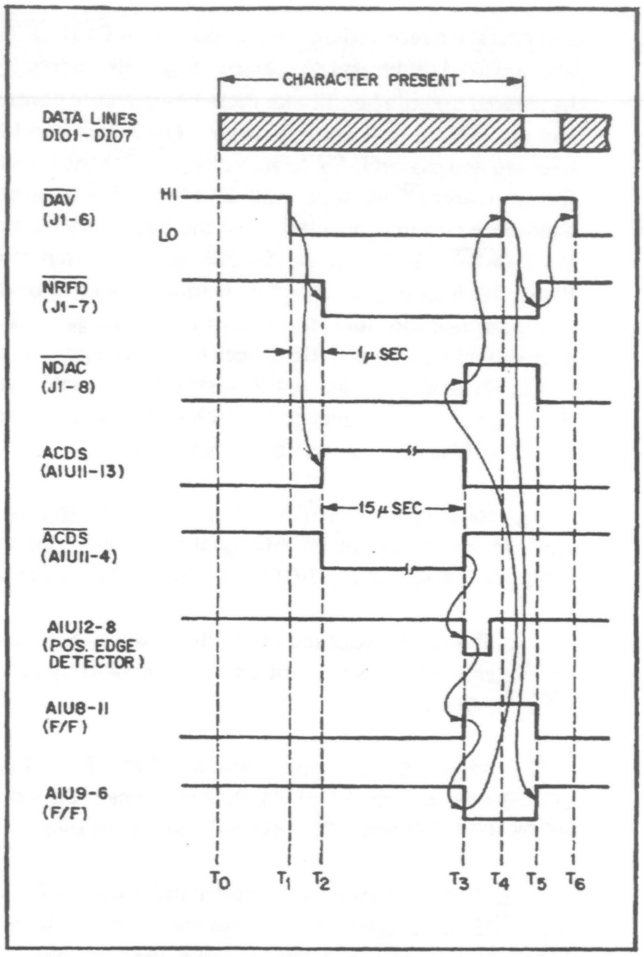

Figure 4-2. Acceptor Handshake Signals, Timing Diagram

4-24 Listen Logic

4-25 The listen logic consists of logic gates which set or reset the listen flip-flop. When the listen flip-flop is set, the 59501B is enabled to function as a "listener". The listen logic is enabled when the HP-IB is in the command mode ($\overline{ATN}$ is LO). If $\overline{ATN}$ is LO and the 59501B's listen address is decoded (ADDRESS is HI), the listen flip-flop is set (U12-3 goes HI) when ACDS is received from the acceptor handshake circuit. Note that only a portion of the listen address is specified by the ADDRESS signal. In addition, HP-IB data input line $\overline{DIO7}$ must be HI and line $\overline{DIO6}$ must be LO to specify that a listen address is present on the bus. When the listen flip-flop is set, driver Q14 turns the LISTENING indicator on. Also, with the listen flip-flop set, the clock generator will be enabled when the bus is placed in the data mode ($\overline{ATN}$ goes HI). The clock generator produces clock pulses which gate the data sequencer storing the data characters received on the bus (see paragraph 4-28).

4-26 If the $\overline{ATN}$ line goes LO again (command mode) and an unlisten command (ASCII "?") is placed on the bus, the listen flip-flop is reset (U12-3 goes LO) when ACDS is received, turning off the LISTENING indicator, inhibiting the clock generator, and resetting the data sequencer. Note that the interface clear ($\overline{IFC}$) signal also resets the listen flip-flop. The $\overline{IFC}$ signal is used by the controller to terminate activity on the bus.

4-27 Clock Generator

4-28 The clock generator is enabled when the listen flip-flop is set (U12-3 is HI) and the HP-IB is in the data mode ($\overline{ATN}$ is HI). When enabled, the clock generator produces a clock pulse (approximately 4μsec wide) on the leading edge of the ACDS signal received from the acceptor handshake circuit. The clock pulse gates the data storage sequencer which loads the data on lines $\overline{DIO1}$-$\overline{DIO4}$ into the appropriate storage latch (see paragraph 4-32).

4-29 Isolators

4-30 Data bits $\overline{DIO1}$-$\overline{DIO4}$, the sequencer clock signal, and the sequencer reset signal are applied through inverter drivers (U13, U14) to photo-isolators (U15, U16, U17). The inputs to the isolators are referenced to HP-IB signal ground ▽ while the outputs are referenced to power supply ground ▽. With these input and output connections, up to 600Vdc isolation is provided between the HP-IB data input lines and the 59501B output terminals. Each dual isolator IC package contains a pair of light emitting diodes and integrated photon detectors. The isolated $\overline{DIO1}$-$\overline{DIO4}$ data bits are routed to the appropriate data 1 storage latches while the isolated clock and reset signals are sent to the data storage sequencer.

4-31 Data Storage

4-32 The data storage circuits consist of data storage 1 latches, data storage 2 latches, and the data storage sequencer circuit. The circuits store a data word which consists of four characters. The characters are transferred from the bus one at a time with the range character transferred first followed by the three magnitude characters. Each character, bits $\overline{DIO4}$ (MSB) – $\overline{DIO1}$ (LSB), is transferred into data storage 1 during the accompanying 3-wire handshake cycle. After the fourth character is transferred into data storage 1, all four characters (data word) are automatically loaded into the data storage 2 latches. The timing sequence for the data word transfer is provided in Figure 4-3.

4-33 The leading edge of each ACDS pulse generates a clock pulse which gates the data storage sequencer. Initially, the data shift register (U25) in the data storage sequencer is reset and the data input (U25-7) is a HI level. The timing sequence that occurs during the transfer of a data word is described below (Refer to Figure 4-3).

a. Cycle 1. The first clock pulse produces a negative

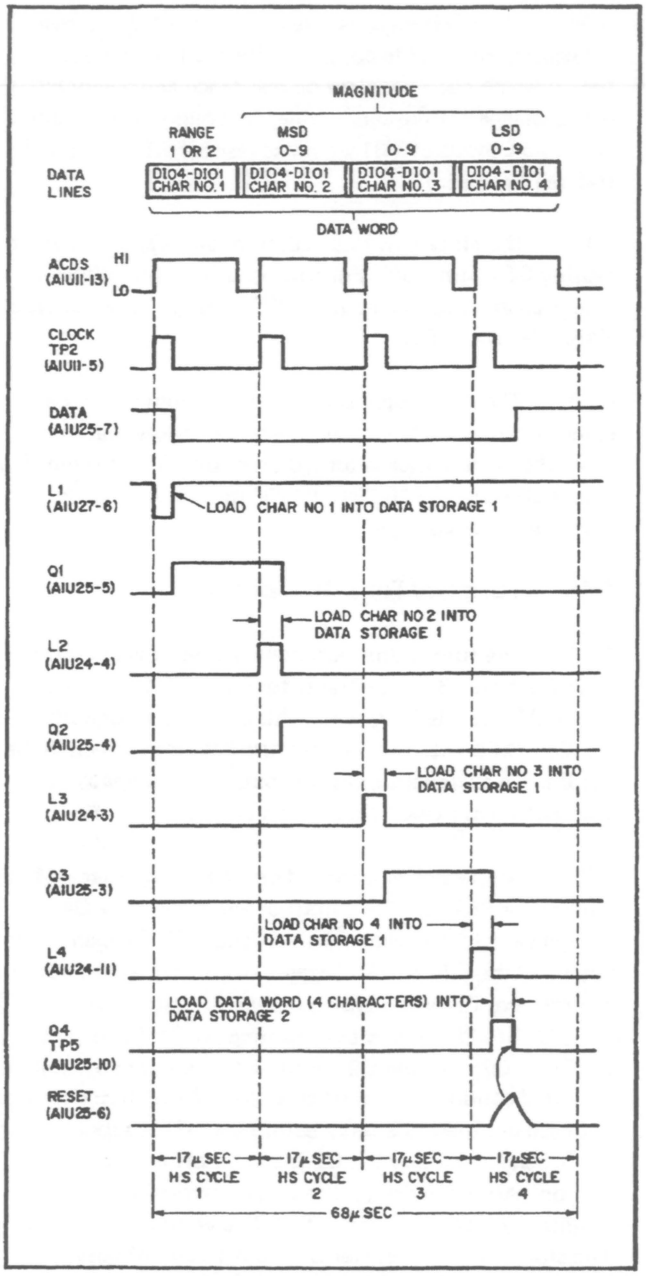

Figure 4-3. Data Word Transfer, Timing Diagram

pulse (L1) at U27-6. The trailing edge of L1 loads the range character into data storage 1 (U26, J/K flip-flop). The trailing edge of the first clock pulse transfers the data input (U25-7) into the shift register causing Q1 (U25-5) to go HI. With Q1 HI, the L2 AND gate (U24-6) is enabled. Also with Q1 HI, the data input (U25-7) goes LO.

b. Cycle 2. The second clock pulse produces a positive pulse L2 at U24-4. While L2 is HI, the first magnitude character is tranferred into data storage 1 (U18, four bit latch). The trailing edge of the second clock pulses causes U25 to shift (Q1 goes LO, Q2 goes HI). With Q2 HI, the data input (U25-7) remains LO and the L3 AND gate (U24-1) is enabled.

c. Cycle 3. The third clock pulse produces a positive pulse L3 at U24-3. While L3 is HI, the second magnitude character is transferred into data storage 1 (U19, four bit latch). The trailing edge of the third clock pulse shifts U25 (Q2 goes LO, Q3 goes HI). With Q3 HI, data input remains LO and the L4 AND gate (U24-13) is enabled.

d. Cycle 4. The fourth clock pulse produces a positive pulse L4 at U24-11. While L4 is HI, the third magnitude character is transferred into storage level 1 (U20, four bit latch). The trailing edge of the fourth clock pulse shifts U25 (Q3 goes LO, Q4 goes HI). When Q4 goes HI, the range character and the three magnitude characters are loaded into the data storage 2 latches (U26 and U21-U23). The Q4 HI transition also causes U25-13 (P/O turn on/off circuit) to go HI (this signal is significant only when power is initially applied and the first data word is loaded, see paragraph 4-51). The Q4 output is fed back to the shift register input (U25-6) through OR gate U28 and delay circuit (C10, R22) resetting the shift register (Q1-Q4 outputs go LO). For this condition, the data input (U25-7) is HI initializing the shift register for the next data word transfer.

4-34 The range latch output (U26-14) is LO if high range was programmed and HI if low range was programmed. The range output controls the range switch in the analog amplifier circuits.

4-35 The magnitude outputs of 4-bit storage latches U21-U23 are applied to the digital-to-analog converter (DAC) U29. The DAC is programmed in BCD. Each 4-bit storage latch contains a number (Ø-9). Thus, the three latches can provide an output from ØØØ-999. The latch outputs are connected to the DAC input in the proper order (i. e., U21 contains the most significant bits, etc). The data storage 2 outputs are retained until a new data word is transferred from the bus.

4-36 Digital-to-Analog Converter (DAC) and I/V Converter

4-37 The DAC (U29) converts the 12-bit BCD input (3-magnitude digits) into an output current. The DAC output range, 0-2mA (nominal), corresponds to a BCD input range of ØØØ-999. The DAC output (U29-9) is applied to the inverting input of operational amplifier U30 (current-to-voltage converter). The UNIPOLAR/BIPOLAR switch (S2) changes the feedback path between U30 and U29. In the UNIPOLAR mode, the output of U30 is connected to pins 10 (10V SPAN R) and 8 (BIPOLAR OFFSET IN) of U29 to obtain a U30 output range from 0 to +2.5V (nominal). In the BIPOLAR mode, the output of U30 is connected to U29-10, however, U29-8 (BIPOLAR OFFSET IN) is connected to the DAC's internal reference (U29-4) through R24. For these connections, the current-to-voltage converter

(U30) provides a bipolar output range from −2.5V to +2.5V (nominal). Variable resistor R26 allows for a zero output adjustment in the bipolar mode. The U30 output is applied to the output amplifier through range resistors R45, R49, and/or R52.

4-38 Output Amplifier

4-39 The output amplifier is comprised of a range amplifier stage (operational amplifier U31), voltage gain stages (Q3, Q4), and complementary emitter follower stages (Q10, Q11). The gain of the amplifier is determined by the range digit programmed.

4-40 When high range is programmed, range resistors R45 and R49 are shunted through range switch FET Q5 (see paragraph 4-44). The high range gain of the output amplifier is equal to − (R2 + R56) ÷ R52. In the high range, the amplifier provides a 0 to +9.99V output (unipolar mode) or a −10V to +9.98V output (bipolar mode).

4-41 When low range is programmed, the gain of the amplifier is equal to − (R2 + R56) ÷ (R45 + R49 + R52). In the low range, the amplifier's unipolar or bipolar output is one tenth of the corresponding high range output. Variable resistor R49 allows a low range gain adjustment while the front panel D/A FULL SCALE ADJUST control (R2) allows setting the maximum rated 59501A output (±5%) in the high and low ranges.

4-42 Transistor stages Q3 and Q4 provide a voltage gain for the low level output (±1V max.) of operational amplifier U31. Stages Q10 (positive) and Q11 (negative) provide the unipolar or bipolar output voltage between terminals A1 and A2. Output current up to 10mA is available and is automatically limited to 17mA (nominal). When terminal A1 is negative with respect to ▽2▽, load current will flow through the Q11 stage. When terminal A1 is positive with respect to ▽2▽, load current will flow through the Q10 stage.

4-43 Diodes CR9 and CR11 protect the output amplifier if an external voltage exceeding 25V (nominal) is connected between the A1 and A2 terminals. If an excessive negative voltage is applied, CR9 will clamp the output to −25V (nom.). If an excessive positive voltage is applied, CR11 will clamp the output to +25V (nom.).

4-44 Range Switch

4-45 The range switch allows the output amplifier to produce a high range or a low range output. The range switch circuit (Q5, Q6) receives the RANGE signal level from range latch U26-14. A LO signal level specifies high range while a HI signal level specifies low range.

4-46 If a LO level is received, transistor Q6 is turned-off causing FET Q5 to conduct. The FET is used as a switch which has a very low on resistance and a very high off resistance. While conducting, Q5 couples the output of U30 to the input of U31 via range resistor R52 (R45 and R49 are bypassed).

4-47 If a HI level is received, transistor Q6 is turned-on causing Q5 to turn-off. For this condition, the output of U30 is coupled to the input of U31 through range resistors R45, R49, and R52.

4-48 The spike suppressor circuit (in conjunction with range amplifier U31) suppresses voltage spikes that occur when the range switch is turned on or off. Voltage limiting diodes CR8 and CR10 (Schottky's) protect U31 from excessive input voltages.

4-49 Turn-On/Turn-Off Control

4-50 The turn-on/turn-off control circuit is comprised of shift register B (U25), transistor stages (Q1, Q2) and FET's Q7-Q9. The purpose of this circuit is to prevent transients at power turn-on and turn-off from affecting the output. To accomplish this, the output is clamped at a low level when power is turned on or off.

4-51 Before power is turned-on, range amplifier U31 is shunted by FET Q8, the output of amplifier stage Q4 is clamped at a low level by FET Q7, and FET Q9 clamps the output of the Q10 and Q11 stages to ground. When power is turned-on, the Vdd supply voltage (junction R27 and R28) resets U25 (U25-13 goes LO), turning on Q1. With Q1 turned-on, FET's Q7, Q8, and Q9 continue to conduct to maintain the initial conditions (low-level output). Note that when power is turned-on, there is a delay before the −15V supply voltage is available, consequently, Q2 is turned off at initial power turn-on. After the delay, Q2 turns-on removing the reset condition at U25. When the first data word is loaded into data storage 2, shift register B output (U25-13) goes HI (see paragraph 4-33d) turning off Q1. With Q1 off, FET's Q7, Q8, and Q9 cutoff allowing the output amplifier to provide an output determined by the programmed data word.

4-52 At turn-off, the −15V supply voltage decays faster than the +15V and Vdd supply voltages. When the −15V supply decays sufficiently, U25 is reset (U25-13 goes LO) turning on Q1 which causes FET's Q7-Q9 to conduct. Thus, the output is clamped at a low level during the decay of the +15V and Vdd supply voltages.

4-53 Bias Voltages

4-54 The bias voltages for the digital and analog circuits

on the main printed circuit board are generated and distributed as shown on sheet 1 of the schematic (Figure 7-3).

4-55 Ac power is applied through the power module and power transformer T1 to two full-wave bridge rectifiers. Integrated circuit U32 receives its raw (unregulated) dc from full-wave rectifier (CR14-16) and filter (C27, C28). IC U32 provides a regulated +5V output, with respect to data common ▽, for all TTL logic circuits on the data common side of the photo-isolators.

4-56 Integrated circuit U33 receives it raw (unregulated) dc from full-wave rectifier (CR19-CR22) and filter (C31-C34). Note that the −15 and +15V unregulated outputs (+25V and −25V, nominal) are also applied to voltage protection diodes CR9 and CR11 (see paragraph 4-43). IC U33 provides regulated ±15V outputs with respect to ▽1, for the DAC and the analog amplifier circuits.

4-57 The Vdd bias supply (Q3) develops its output from the +15V supply. Vdd (+5V), referenced to ▽1, is distributed to all CMOS logic circuits on the ▽1 side of the photo-isolators. Note that power supply ground ▽1 and output ground ▽2 are connected together.

SECTION V
MAINTENANCE

5-1 INTRODUCTION

5-2 This section contains checkout, troubleshooting, repair and replacement, and adjustment procedures for the 59501B The checkout procedures verify that the 59501B circuitry is operating properly by checking that it can be programmed by an HP-IB controller and that it is properly adjusted. The troubleshooting procedures are performed if a malfunction occurs while performing the checkout procedures or during normal operations.

5-3 TEST EQUIPMENT REQUIRED

5-4 The controller (e.g. 9825A calculator), equipped with the appropriate bus interface card, provides all of the signal inputs neccessary for checking and troubleshooting the 59501B. The additional instruments required for troubleshooting are listed in Table 5-1.

5-5 If available, Bus System Analyzer HP Model 59401A can be used in place of the calculator when checking or troubleshooting the 59501B. The 59401A provides talker, listener, and controller modes of operation. The operating speed of the 59401A varies from one character at a time in the halt mode, to two characters per second in the slow mode, and full HP-IB speed in the fast mode. Thus, the 59401A can be used to exercise the 59501B circuitry allowing one character at a time to be transferred and checked.

5-6 CHECKOUT PROCEDURES

5-7 The procedures given in the flow chart of Figure 5-1 can be used to check operation of the 59501B when it is initially received. If a malfunction is detected during checkout, the procedures determine whether adjustment or troubleshooting is required, The procedures in Figure 5-1 provide the following checks:

1. Output voltage is held near 0V when power is applied.
2. Listen logic is enabled when the 59501B's listen address is received.
3. Listen logic is disabled when the interface clear (IFC) signal is received.
4. Unipolar mode – zero output programming accuracy.
5. Unipolar mode – full scale programming accuracy.
6. Bipolar mode – full scale programming accuracy.
7. Listen logic is disabled when the "Unlisten" command is received.

5-8 The checkout procedures are performed with the 59501B connected to the HP-IB along with a controller. The 59501B's address switches are set to "&" and a DVM is connected between the A1 and A2 output terminals. Connect the DVM common lead to the A1 output terminal.

5-9 TROUBLESHOOTING

5-10 The troubleshooting procedures (Figures 5-2 through 5-4) assume that the controller is operating properly and that a malfunction exists in the 59501B. Before attempting to troubleshoot the 59501B, ensure that the fault was not caused by a programming error. Also, it is recommended that the reader review the circuit descriptions provided in Section IV. A good understanding of circuit operation will aid in troubleshooting. In order to troubleshoot the 59501B, the bottom cover must be removed.

Table 5-1. Test Equipment Required

Type	Characteristics	Use	Recommended Model
Digital Voltmeter	Accuracy: ±0.004%	Precision dc voltage measurements	HP Model 3455A or 3490A
Oscilloscope	Bandwidth: dc to 50MHz	Adjust zero output accuracy. Check handshake cycle timing. CMOS logic circuit troubleshooting.	HP Model 180C with 1803A and 1821A plug-ins.
Logic Probe	Impedance: 25k , Trigger Thresh: 2.0V and 0.8V (nom) Min. Pulse Width: 10nsec.	TTL logic circuit troubleshooting.	HP 10525T
TTL/CMOS Logic Probe		TTL/CMOS logic circuit troubleshooting	HP 545A

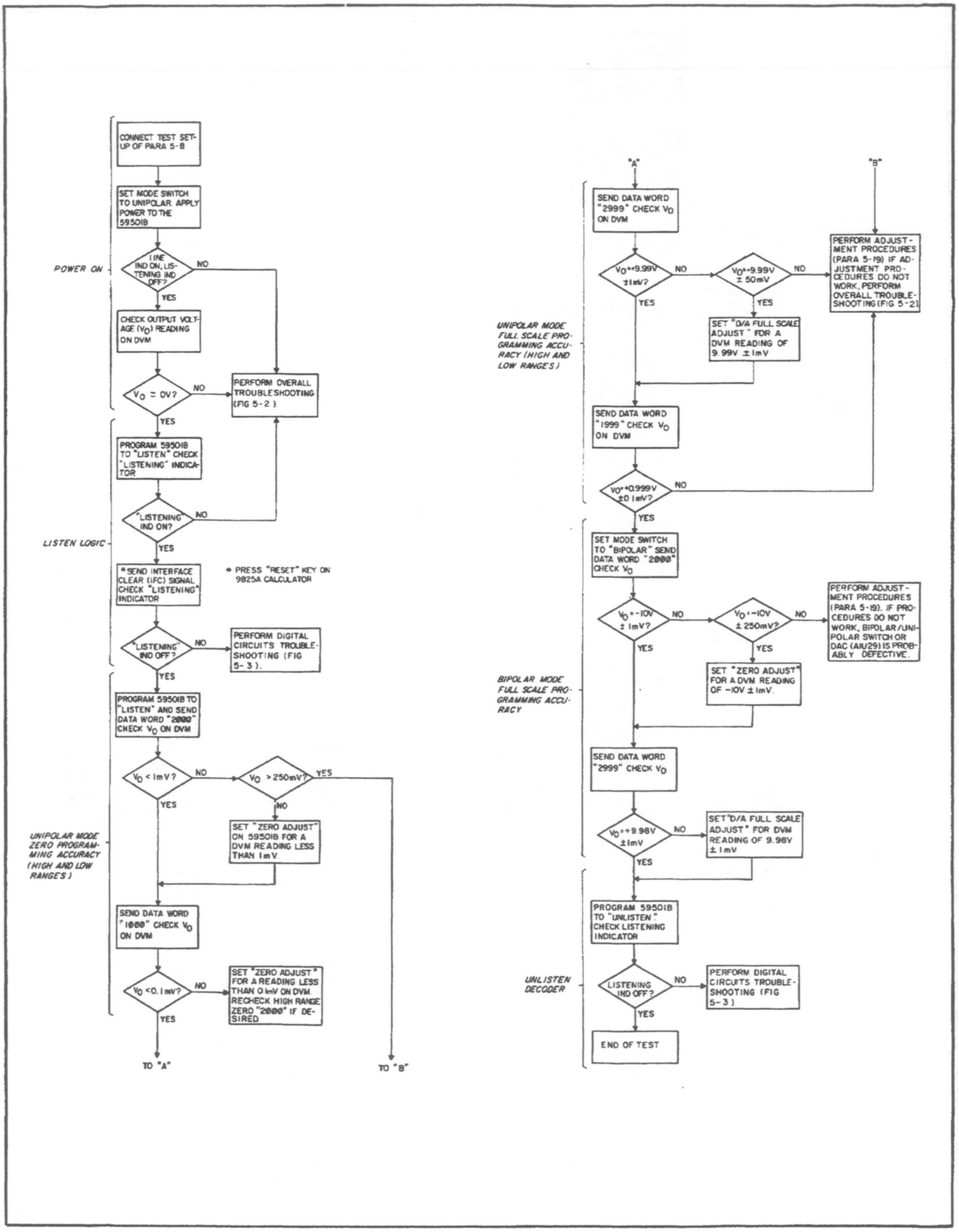

Figure 5-1. Checkout Procedures, Flow Chart

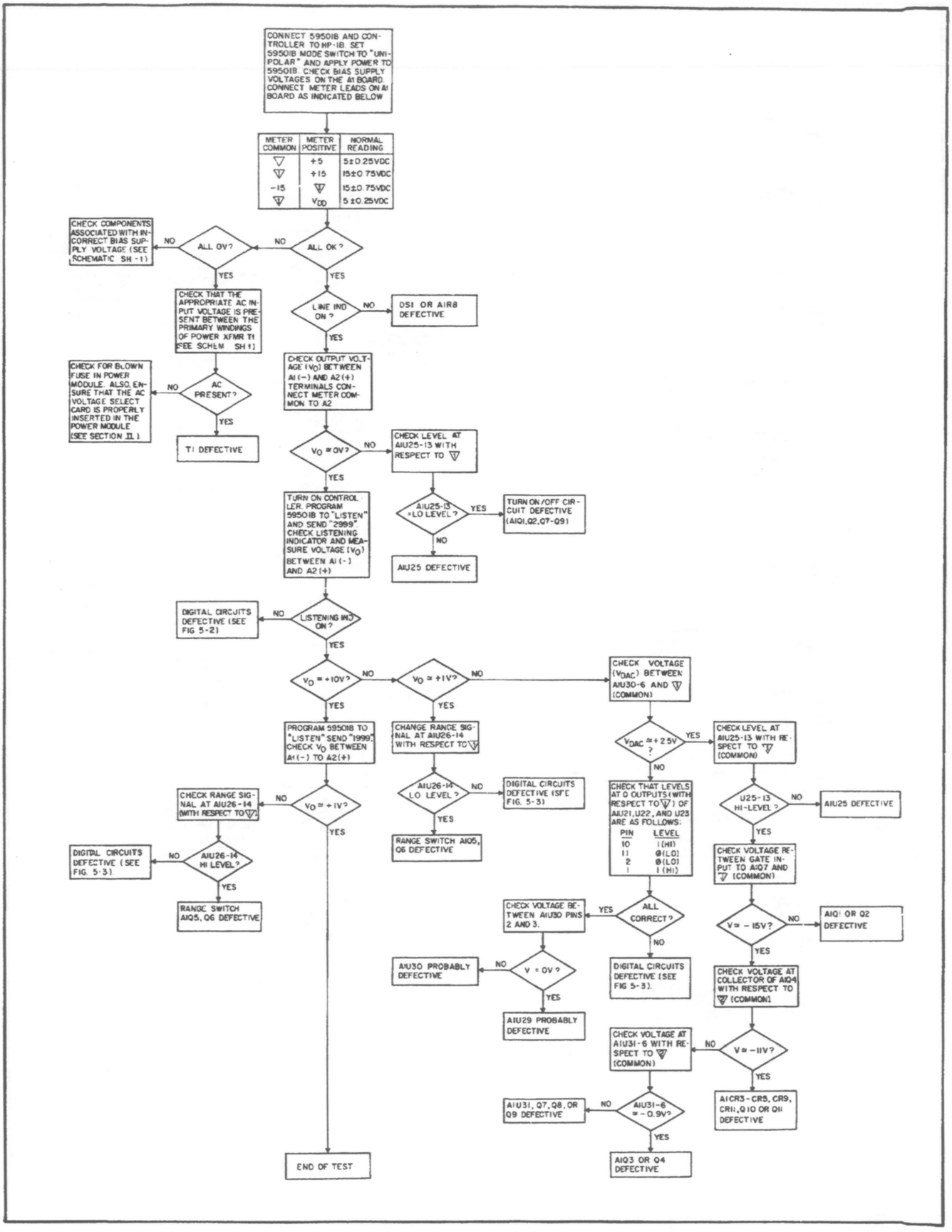

Figure 5-2. Overall Troubleshooting Procedures, Flow Chart

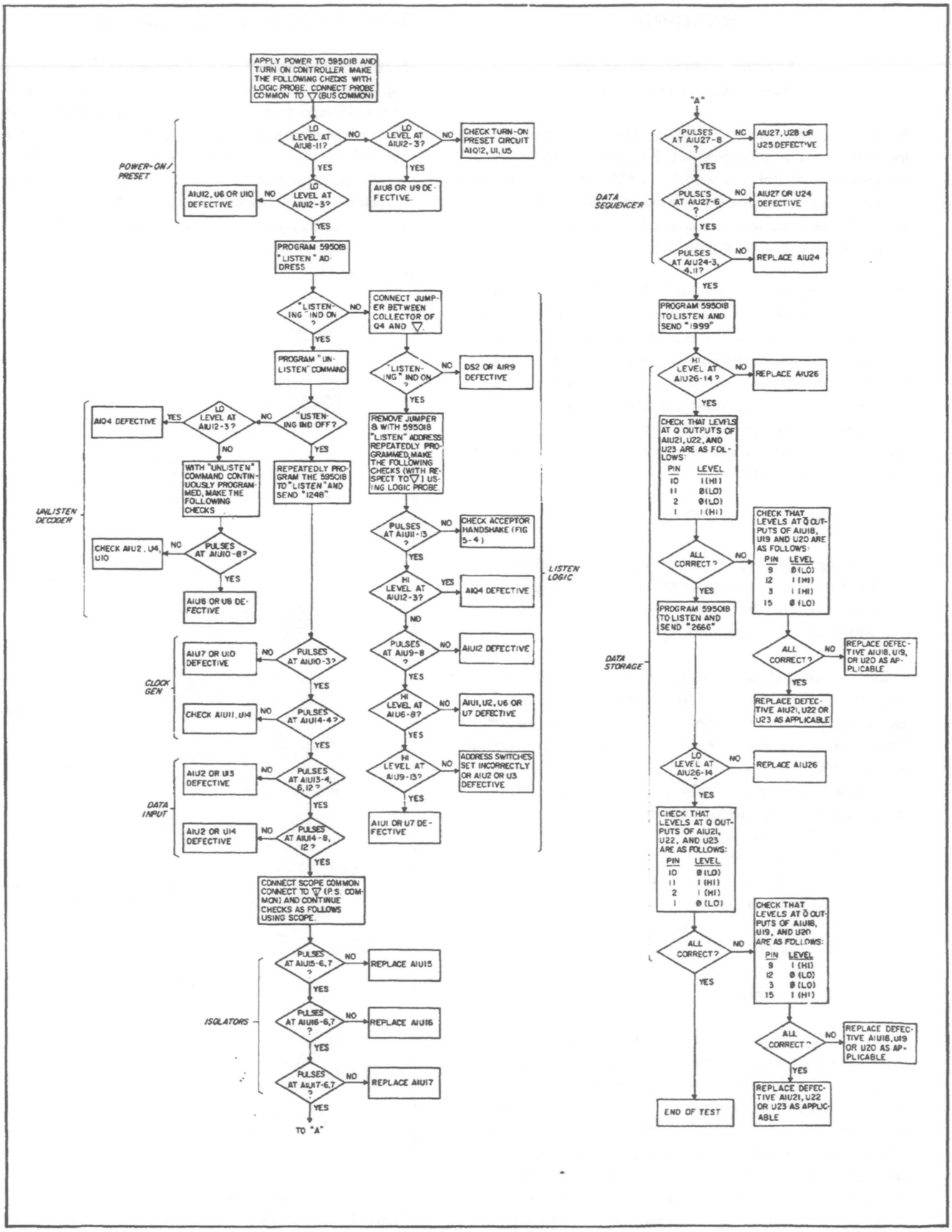

Figure 5-3. Digital Circuits Troubleshooting, Flow Chart

WARNING

Exercise extreme caution when working on energized circuits.

5-11. Overall Troubleshooting. The overall troubleshooting procedures given in Figure 5-2 isolate a malfunction to the analog or digital sections of the 59501B. Analog circuit malfunctions are isolated to the component level. Additional troubleshooting flow charts (Figures 5-3 and 5-4) are provided for digital circuit malfunctions.

5-12 The procedures given in Figure 5-2 first check the bias supply voltages to ensure that these voltages are correct before continuing with the troubleshooting. If the supply voltages are correct, the procedures continue to check if a malfunction is present in the analog or digital portions of the 59501B. If a malfunction is not detected, review the programming and operating instructions provided in Section III to check if the fault was caused by a programming or operating error.

NOTE

TTL logic levels (1 = true ⩾ 2V, Ø = false ⩽ 0.8V) are measured with respect to ▽. CMOS logic levels (1 = true ⩾ 3.5V, Ø = false ⩽ 1.5V) are measured with respect to ▽

5-13 Digital Circuits Troubleshooting. The digital circuits troubleshooting procedures given in Figure 5-3 isolate a malfunction to components within the circuits listed below or to the acceptor handshake circuit. A separate flow chart (Figure 5-4) is provided to troubleshoot the acceptor handshake circut. Figure 5-3 checks the digital circuits in the following sequence:

1. Power-on/preset
2. Listen logic
3. Unlisten decoder
4. Clock generator
5. Data input circuits
6. Isolators
7. Data sequencer
8. Data storage

5-14 Acceptor Handshake Troubleshooting. Figure 5-4 provides a static check of the acceptor handshake circuit. However, it is possible to have a condition where a faulty circuit would not be detected by performing these checks. If a timing problem is suspected, the acceptor handshake circuit must be checked dynamically. A dynamic test can be made by continuously programming the 59501B to "listen" and observing the handshake signals on an oscilloscope. The handshake cycle timing relationships are shown in Figure 4-2.

5-15 REPAIR AND REPLACEMENT

5-16 All components and wiring are accessible when the top and bottom covers are removed. The component side of the A1 board, the chassis mounted components, and the front panel components are accessible when the bottom cover is removed. (See Figure 7-1). The wiring side of the A1 board is accessible when the top cover is removed. To remove the bottom cover, remove two rear screws, lift the cover, and pull it to the rear. The top cover is removed in a similar manner.

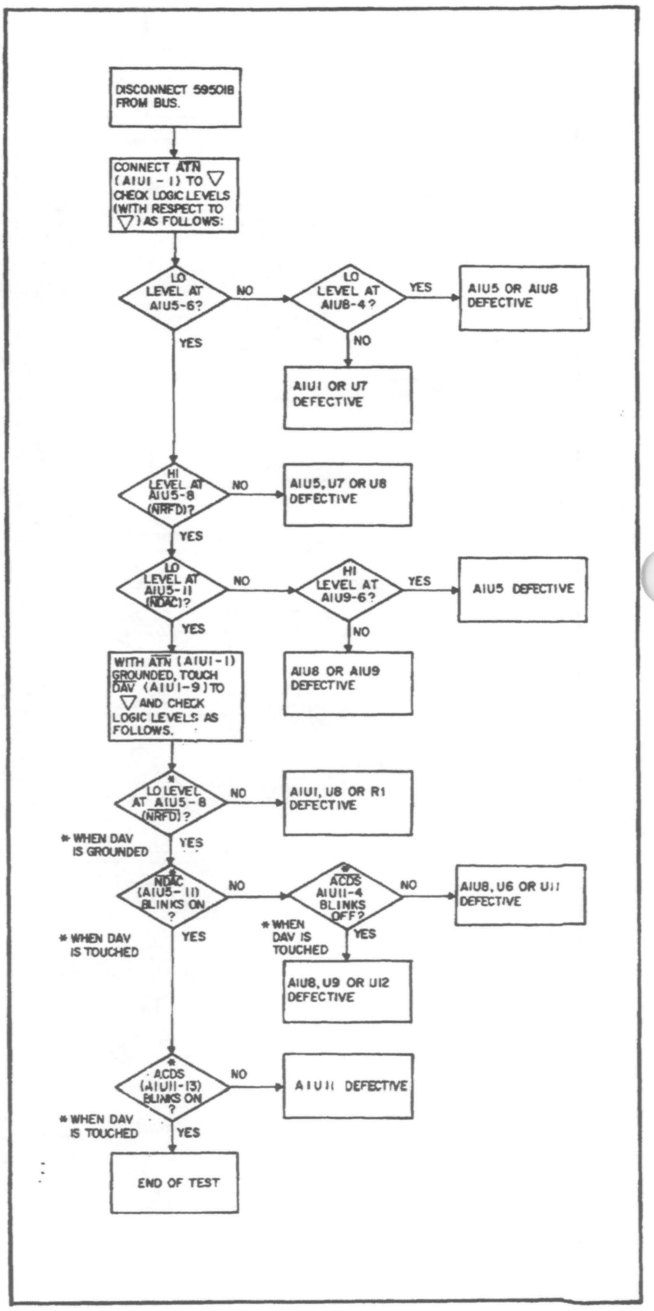

Figure 5-4. Acceptor Handshake Circuits Troubleshooting, Flow Chart

5-17 REPLACEMENT PARTS

5-18 Section VI of this manual contains a list of replaceable parts. If the part to be replaced does not have a standard manufacturer's part number, it is a special part number and must be obtained directly from Hewlett-Packard.

5-19 ADJUSTMENT AND CALIBRATION

5-20 The 59501B is factory calibrated to operate properly regardless of the mode selected (unipolar or bipolar). The calibration procedures, described in paragraphs 5-21 through 5-26, may be required after performing the checkout procedures, troubleshooting, or repair and replacement. Once the unit is calibrated, the front panel controls may be adjusted as required for unipolar or bipolar operation (paragraphs 5-27 through 5-30).

5-21 Calibration

5-22 The calibration procedures must be performed in the order in which they are presented in the following paragraphs.

5-23 Test Setup.

a. Remove the bottom cover to gain access to the potentiometers on the A1 board (see Figure 7-).

b. Connect oscilloscope to the A1 and A2 output terminals on rear of 59501B. Connect scope common to the A1 terminal. Set Time/Div. to 1msec/div and Volt/Div. to 1mV/cm.

c. Check that the address switches on the rear of the 59501B are set to "&".

d. Connect the 59501B to an HP-IB controller.

e. Apply power to 59501B and controller. Allow a 30-minute warmup.

5-24 Unipolar Mode — Zero Programming Accuracy. To adjust the zero programming accuracy in the high and low output ranges, proceed as follows:

a. Set mode switch on rear of 59501B to UNIPOLAR.

b. Program 59501B to "Listen" and alternately send data words "1000" (zero low range) and "2000" (zero high range).

c. Adjust potentiometer A1R61 (unipolar zero balance) for a straight line as indicated on the scope.

d. Remove scope and connect a DVM between the A1 and A2 output terminals. Connect DVM common to A1.

e. Send data word "2000" to the 59501B.

f. Adjust front panel ZERO ADJUST for a reading of 0V ±1mV on DVM.

5-25 Unipolar Mode — Full Scale Programming Accuracy. To adjust the full scale programming accuracy in the high and low ranges, proceed as follows:

a. Send data word "2999" (high range full scale) to the 59501B.

b. Adjust D/A FULL SCALE ADJUST for a reading of +9.99V ± 1mV on DVM.

c. Send data word "1999" (low range full scale) to the 59501B.

d. Adjust potentiometer A1R49 (low range gain) for a reading of +0.999V ± 0.1mV on DVM.

e. Check the zero programming accuracy (paragraph 5-24 steps a through e) and the full scale programming accuracy (steps a through d above) and repeat both procedures if required.

5-26 Bipolar Mode — Zero Programming Accuracy. Use the same test setup as described in paragraph 5-23.

a. Perform steps 5-24a through 5-24e.

b. Set mode switch on rear of 59501B to BIPOLAR.

c. Program 59501B to "Listen" and alternately send data words "1500" (0V, low range) and "2500" (0V, high range).

d. Adjust potentiometer A1R26 (bipolar zero balance) for a straight line as indicated on the scope.

5-27 Front Panel Adjustments

5-28 After the unit is calibrated, the front panel controls are adjusted for unipolar or bipolar operation. Note that the following procedures adjust the output of the 59501B when it is to be used as a DAC. If the 59501B is to be used as a power supply programmer, follow the calibration procedures provided in Section III (paragraphs 3-51 through 3-66.

5-29 Unipolar Mode. Use the same test setup as paragraph 5-23 except connect a DVM between the A1 and A2 output terminals. Connect the DVM common to the A2 terminal.

a. Set mode switch to UNIPOLAR.

b. Program 59501B to "Listen". Send data word "2000" (high range zero) and adjust front panel ZERO ADJUST for a reading of 0V ±0,1mV on DVM.

c. Send data word "2999" (high range full scale) and adjust front panel D/A FULL SCALE ADJUST for a reading of +9.99V ± 1mV on DVM.

5-30 Bipolar Mode. Use same test setup as above.

a. Set mode switch to BIPOLAR.

b. Send data word "2000" and adjust ZERO ADJUST for a reading of −10V ±1mV on DVM.

c. Send data word "2999" and adjust D/A FULL SCALE ADJUST for a reading of +9.98V ±1mV on DVM.

d. Repeat steps b and c.

SECTION VI
REPLACEABLE PARTS

6-1 INTRODUCTION

6-2 This section contains information for ordering replacement parts. Table 6-3 lists parts in alpha-numeric order by reference designators and provides the following information:

a. Reference Designators. Refer to Table 6-1.

b. Description. Refer to Table 6-2 for abreviations.

c. Total Quantity (TQ). Given only the first time the part number is listed except in instruments containing many sub-modular assemblies, in which case the TQ appears the first time the part number is listed in each assembly.

d. Manufacturer's Part Number or Type.

e. Manufacturer's Federal Supply Code Number. Refer to Table 6-4 for manufacturer's name and address.

f. Hewlett-Packard Part Number.

g. Recommended Spare Parts Quantity (RS) for complete maintenance of one instrument during one year of isolated service.

h. Parts not identified by a reference designator are listed at the end of Table 6-3 under Mechanical and/or Miscellaneous. The former consists of parts belonging to and grouped by individual assemblies; the latter consists of all parts not immediately associated with an assembly.

6-3 ORDERING INFORMATION

6-4 To order a replacement part, address order or inquiry to your local Hewlett-Packard sales office (see lists at rear of this manual for addresses). Specify the following information for each part: Model, complete serial number, and any Option or special modification (J) numbers of the instrument; Hewlett-Packard part number; circuit reference designator; and description. To order a part not listed in Table 6-3, give a complete description of the part, its function, and its location.

Table 6-1. Reference Designators

A	= assembly	E	= miscellaneous electronic part
B	= blower (fan)	F	= fuse
C	= capacitor	J	= jack, jumper
CB	= circuit breaker	K	= relay
CR	= diode	L	= inductor
DS	= device, signaling (lamp)	M	= meter

Table 6-1. Reference Designators (Continued)

P	= plug	V	= vacuum tube, neon bulb, photocell, etc.
Q	= transistor	VR	= zener diode
R	= resistor	X	= socket
S	= switch	Z	= integrated circuit or network
T	= transformer		
TB	= terminal block		
TS	= thermal switch		

Table 6-2. Description Abbreviations

A	= ampere	mod.	= modular or modified
ac	= alternating current	mtg	= mounting
assy.	= assembly	n	= nano = 10^{-9}
bd	= board	NC	= normally closed
bkt	= bracket	NO	= normally open
°C	= degree Centigrade	NP	= nickel-plated
cd	= card	Ω	= ohm
coef	= coefficient	obd	= order by description
comp	= composition	OD	= outside diameter
CRT	= cathode-ray tube	p	= pico = 10^{-12}
CT	= center-tapped	P.C.	= printed circuit
dc	= direct current	pot.	= potentiometer
DPDT	= double pole, double throw	p-p	= peak-to-peak
DPST	= double pole, single throw	ppm	= parts per million
elect	= electrolytic	pvr	= peak reverse voltage
encap	= encapsulated	rect	= rectifier
F	= farad	rms	= root mean square
°F	= degree Farenheit	Si	= silicon
fxd	= fixed	SPDT	= single pole, double throw
Ge	= germanium	SPST	= single pole, single throw
H	= Henry	SS	= small signal
Hz	= Hertz	T	= slow-blow
IC	= integrated circuit	tan.	= tantulum
ID	= inside diameter	Ti	= titanium
incnd	= incandescent	V	= volt
k	= kilo = 10^{3}	var	= variable
m	= milli = 10^{-3}	ww	= wirewound
M	= mega = 10^{6}	W	= Watt
μ	= micro = 10^{-6}		
met.	= metal		
mfr	= manufacturer		

Table 6-3. Replaceable Parts

REF. DESIG.	DESCRIPTION	TQ.	MFR. PART NO.	MFR. CODE	HP PART NO.	RS
A1	**Main Board Assembly** (See Note 1)					
C1	fxd, cer. 1000pF, 1kV	1		28480	0150-0050	1
C2-5	fxd, cer. 0.01μF, 100V	11		28480	0150-0093	2
C6	fxd, mica. 500pF, 1%, 300V	1		28480	0140-0234	1
C7	fxd, cer. 0.01μF, 100V			28480	0150-0093	
C8	fxd, cer. 470pF, 10%, 1kV	1		28480	0160-2496	1
C9, 10	fxd, mica, 91pF, 1%, 300V	2		28480	0160-0335	1
C11-15	fxd, cer. 0.01μF, 100V			28480	0150-0093	
C16, 17	fxd, cer. 0.1μF, 50V	5		28480	0160-4835	1
C18	fxd, mica. 100pF, 10%, 500V	1		28480	0160-2006	1
C19	Not assigned					
C20	fxd, mica. 30pF, 5%, 500V	2		28480	0140-0203	1
C21	fxd, mica. 390pF, 5%, 300V	1		28480	0140-0200	1
C22	fxd, cer. 0.02μF, 20%, 2kV	2		28480	0160-2569	1
C23	fxd, cer. 1μF, 20%, 25V	2		28480	0160-0127	1
C24	fxd, mica. 30pF, 5%, 500V			28480	0140-0203	
C25	fxd, cer. 1μF, 20%, 25V			28480	0160-0127	
C26	fxd, cer. 0.01μF, 100V			28480	0150-0093	
C27	fxd, elect. 2000μF, 20V	1		28480	0180-2685	1
C28	fxd, cer. 0.1μF, 50V			28480	0160-4835	
C29	fxd, elect. 22μF, 10%, 15V	1	150D226X9015B2	56289	0180-0228	1
C30	fxd, elect. 1μF, 10%, 35V	2	150D105X9035A2	56289	0180-0291	1
C31, 32	fxd, elect. 180μF, 50V	2	672D047	56289	0180-0634	1
C33, 34	fxd, cer. 0.1μF, 50V			28480	0160-4835	
C35, 36	fxd, mica. 1500pF, 5%, 300V	2		28480	0160-3068	1
C37, 38	fxd, elect. 10μF, 10%, 20V	2	150D106X9020B2	56289	0180-0374	1
C39	fxd, elect. 1μF, 10%, 35V		150D105X9035A2	56289	0180-0291	
C40	fxd, mica. 47pF, 5%, 500V	1		28480	0140-0204	1
C41	fxd, mica. 56pF, 5%, 300V	1		28480	0140-0191	1
C42	fxd, cer 0.02μF, 20%, 2kV	3		28480	0160-2569	
CR1, 2	Diode, Si. 200mA, 75V	7	1N4148	28480	1901-0050	6
CR3	Stabistor 15V, 150mA	3		28480	1901-0460	3
CR4-7	Diode, Si. 200mA, 75V		1N4148	28480	1901-0050	
CR8	Diode, Schottky	2		28480	1901-0535	2
CR9	Diode, power rectifier	10		28480	1901-0327	10
CR10	Diode, Schottky			28480	1901-0535	
CR11	Diode, power rectifier			28480	1901-0327	
CR12, 13	Stabistor 15V, 150mA			28480	1901-0460	
CR14-17	Diode, power rectifier			28480	1901-0327	
CR18	Diode, Si. 200mA, 75V		1N4148	28480	1901-0050	
CR19-22	Diode, power rectifier			28480	1901-0327	
J1	Connector	1		28480		
J2	Connector	1		28480	1251-5385	
J3	HP-IB connector, 24 pin microribbon	1		28480	1251-7162	1
Q1	SS PNP Si.	2		28480	1853-0099	2
Q2	SS NPN Si.	4		28480	1854-0823	5
Q3	SS PNP Si.			28480	1853-0099	
Q4	SS NPN Si.	1	2N3417	03508	1854-0087	1
Q5	J-FET	4	2N4392	04713	1855-0386	4
Q6	SS NPN Si.			28480	1854-0823	
Q7-9	J-FET		2N4392	04713	1855-0386	

Note 1: This assembly is designed for component level repair. Replacement assemblies cannot be supplied.

Table 6-3. Replaceable Parts

REF. DESIG.	DESCRIPTION	TQ	MFR. PART NO.	MFR. CODE	HP PART NO.	RS
Q10	SS NPN	1	2N2222A	07263	1854-0477	1
Q11	SS PNP	1	2N2907A	04713	1853-0281	1
Q12,13	SS NPN Si.			28480	1854-0823	
R1-4	Not Used					
R5	fxd, film 383 1%, 1/8W	1	C4-1/8-TO-383R-F	24546	0698-3446	
R6	fxd, film 47.5k, 1%, 1/8W	1	C4-1/8-TO-4752-F	24546	0757-0457	1
R7	Not Used					1
R8	fxd, film 301, 1%, 1/8W	1	C4-1/8-TO-301R-F	24546	0757-0410	1
R9	Not Used					
R10-15	fxd, film 162, 1%, 1/8W	6	C4-1/8-TO-162R-F	24546	0757-0405	1
R16-21	fxd, film 4.12k, 1%, 1/8W	8	C4-1/8-TO-4121-F	24546	0698-3493	1
R22	fxd, film 16.2k, 1%, 1/8W	1	C4-1/8-TO-1622-F	24546	0757-0447	1
R23	fxd, film 2.37k, 1%, 1/8W	1	C4-1/8-TO-2371-F	24546	0698-3150	1
R24, 25	fxd, film 10, 1%, 1/8W	4	C4-1/8-TO-10R0-F	24546	0757-0346	1
R26	var., cermet 25k, 10%	2		28480	2100-3282	1
R27	fxd, film 11.3k, 1%, 1/8W	1	C4-1/8-TO-1132-F	24546	0698-4121	1
R28	fxd, film 36.5k, 1%, 1/8W	1	C4-1/8-TO-3652-F	24546	0757-0455	1
R29	fxd, film 19.6k, 1%, 1/8W	6	C4-1/8-TO-1962-F	24546	0698-3157	1
R30	fxd, film 121k, 1%, 1/8W	5	C4-1/8-TO-1213-F	24546	0757-0467	1
R31	fxd, film 19.6k, 1%, 1/8W		C4-1/8-TO-1962-F	24546	0698-3157	
R32	fxd, film 51.1k, 1%, 1/8W	1	C4-1/8-TO-5112-F	24546	0757-0458	1
R33	fxd, film 1k, 1%, 1/8W	5	C4-1/8-TO-1001-F	24546	0757-0280	1
R34	fxd, film 200k, 1%, 1/8W	1	C4-1/8-TO-2003-F	24546	0757-0472	1
R35	fxd, film 121k, 1%, 1/8W		C4-1/8-TO-1213-F	24546	0757-0467	
R36	fxd, film 1k, 1%, 1/8W		C4-1/8-TO-1001-F	24546	0757-0280	
R37	fxd, film 121k, 1%, 1/8W		C4-1/8-TO-1213-F	24546	0757-0467	
R38	fxd, film 1.5k, 1%, 1/8W	1	C4-1/8-TO-1501-F	24546	0757-0427	1
R39	fxd, film 13.3k, 1%, 1/8W	2	C4-1/8-TO-1332-F	24546	0757-0289	1
R40	fxd, film 121k, 1%, 1/8W		C4-1/8-TO-1213-F	24546	0757-0467	
R41	fxd, film 30.1k, 1%, 1/8W		C4-1/8-TO-3012-F	24546	0757-0453	1
R42	fxd, film 4.12k, 1%, 1/8W		C4-1/8-TO-4121-F	24546	0698-3493	
R43	fxd, film 13.3k, 1%, 1/8W		C4-1/8-TO-1332-F	24546	0757-0289	
R44	fxd, film 42.2k, 1%, 1/8W		C4-1/8-TO-4222-F	24546	0698-3450	
R45	fxd, film 133k, 1%, 1/8W	1	C4-1/8-TO-1333-F	24546	0698-6351	1
R46	fxd, film 825 1%, 1/8W	1	C4-1/8-TO-825R-F	24546	0757-0421	1
R47	fxd, film 68.1k, 1%, 1/8W	1	C4-1/8-TO-6812-F	24546	0757-0461	1
R48	fxd, film 2.87k, 1%, 1/8W	1	C4-1/8-TO-2871-F	24546	0698-3151	1
R49	var., cermet. 5k, 10%	1		28480	2100-3089	1
R50	fxd, film 100k, 1%, 1/8W	1	C4-1/8-TO-1003-F	24546	0757-0465	1
R51	fxd, film 56.2k, 1%, 1/8W	1	C4-1/8-TO-5622-F	24546	0757-0459	1
R52	fxd, ww, 15k, 0.1%, 1/8W	1		28480	0811-0617	1
R53	fxd, film 19.6k, 1%, 1/8W		C4-1/8-TO-1962-F	24546	0698-3157	
R54	fxd, film 4.12k, 1%, 1/8W		C4-1/8-TO-4121-F	24546	0698-3493	
R55	fxd, film 121k, 1%, 1/8W		C4-1/8-TO-1213-F	24546	0757-0467	
R56	fxd, film 56k, 1%, 1/8W	1	C4-1/8-TO-5603-F	24546	0698-7666	1
R57	fxd, film 68.1, 1%, 1/8W	2	C4-1/8-TO-68R1-F	24546	0757-0397	1
R58, 59	fxd, film 1k, 1%, 1/8W		C4-1/8-TO-1001-F	24546	0757-0280	
R60	fxd, film 19.6k, 1%, 1/8W		C4-1/8-TO-1962-F	24546	0698-3157	
R61	var., cermet, 25k, 10%			28480	2100-3282	

Table 6-3. Replaceable Parts

REF. DESIG.	DESCRIPTION	TQ.	MFR. PART NO.	MFR. CODE	HP PART NO.	RS
R62	fxd, film 68.1, 1%, 1/8W		C4-1/8-TO-68R1-F	24546	0757-0397	
R63	fxd, film 42.2k, 1%, 1/8W		C4-1/8-TO-4222-F	24546	0698-3450	
R64	fxd, film 19.6k, 1%, 1/8W		C4-1/8-TO-1962-F	24546	0698-3157	
R65	fxd, film 464k, 1%, 1/8W	1	C4-1/8-TO-4643-F	24546	0698-3260	1
R66, 67	fxd, film 475, 1%, 1/8W	2	C4-1/8-475R-F	24546	0757-0415	1
R68	fxd, film 19.6k, 1%, 1/8W		C4-1/8-TO-1962-F	24546	0698-3157	
R69	fxd, film 20k, 1%, 1/8W	1	C4-1/8-TO-2002-F	24546	0757-0449	1
R70	fxd, film 1k, 1%, 1/8W		C4-1/8-TO-1001-F	24546	0757-0280	
R71, 72	fxd, film 10, 1%, 1/8W		C4-1/8-TO-10R0-F	24546	0757-0346	
R73	fxd, film 9.31k, 1%, 1/8W	1	C4-1/8-TO-9311-F	24546	0698-0064	1
R74	fxd, film 5.62k, 1%, 1/8W	1	C4-1/8-TO-5621-F	24546	0757-0200	1
R75	fxd, film 21.5k, 1%, 1/8W	1	C4-1/8-TO-2152-F	24546	0757-0199	1
R76	fxd, ww 3.32k, 1%, 1W	1	R51A-1-3321-F	91637	0811-1999	1
R77	fxd, ww 100k, 5%, 10W	1		28480	0811-3029	1
R78	fxd, film 4.75k, 1%, 1/8W	1	C4-1/8-TO-4751-F	24546	0757-0437	
R79	fxd, film 15k, 1%, 1/8W	1	C4-1/8-TO-1502-F	24546	0757-0446	
R80	fxd, film 442k, 1%, 1/8W	1	C4-1/8-TO-4423-F		0698-3460	1
S1	Address switch	1		28480	3101-1973	1
TB1	Barrier block 6-terminal	1		28480	0360-1833	1
U1, 2	Hex Schmitt Trig. Inverter IC	2	SN74LS14N	01295	1820-1416	2
U3	Digital comparator, IC	1	93L24DC	07263	1820-0904	1
U4	8-Input Positive - NAND Gate, IC	1	SN74LS30N	01295	1820-1207	1
U5	Quad-2 Input Positive NAND Buffer, Open Coll. IC	1	SN7438N	01295	1820-0621	1
U6	Triple 3-Input Positive NOR Gate	1	SN74LS27N	01295	1820-1206	1
U7	Hex Inverter, IC	3	SN74LS04N	01295	1820-1199	3
U8	Quad 2-Input Positive NAND Gate, IC	3	SN74LS00N	01295	1820-1197	3
U9	Dual 4-Input NAND Gate, IC	1	SN74LS0N	01295	1820-1204	1
U10	Quad 2-Input Positive - NAND Gate, IC		SN74LS00N	01295	1820-1197	
U11	Dual Monostable Multivibrator with Schmitt Trig. Inputs IC	1	SN74LS221N	01295	1820-1437	1
U12	Quad 2-Input Positive - NAND Gate, IC		SN74LS00N	01295	1820-1197	
U13, 14	Hex Inverter, IC		SN74LS04N	01295	1820-1199	
U15-17	Dual High Speed Optically Coupled Isolators	3		28480	1990-0608	3
U18-23	COS/MOS Quad Clocked "D" Latch, IC	6	CD4042AF	3L585	1820-0958	6
U24	COS/MOS Quad 2-Input AND Gate, IC	1	CD4081BY	02735	1820-1486	1
U25	COS/MOS Dual 4-Stage Static Shift Reg., IC	1	CD4015AE	02735	1820-0976	1
U26	COS/MOS Dual J-K F/F, IC	1	CD4027AE	02735	1820-0938	1
U27	COS/MOS Hex Inverter, IC	1	CD4069BY	02735	1820-1404	1
U28	COS/MOS Triple 3-Input OR Gate, IC	1	CD4075BY	02735	1820-1405	1
U29	12-Bit D/A Converter, IC	1		28480	1820-1856	1
U30	Operational Amplifier, IC	1	LM301AH	27014	1820-0223	1
U31	Operational Amplifier, IC	1	LM308	27014	1826-0172	1
U32	5V Regulator, IC	1	MC7805C	04713	1826-0144	1
U33	Dual ±15V Reg. IC	1	MC1468	04713	1826-0140	1
VR1	Diode, zener 12.4V, 5%	1		28480	1902-3185	1
VR2	Diode, zener 16.2V, 5%	1		28480	1902-0184	1

Table 6-3. Replaceable Parts

REF. DESIG.	DESCRIPTION	TQ.	MFR. PART NO.	MFR. CODE	HP PART NO.	RS
Z1, 2	Resistor Network, 3k/6.2k, 5%,.02W	2	216C	56289	1810-0136	
Z3	Resistor Network, 4.7k, 5%, 0.15W	1	200C-1858-CRR	56289	1810-0125	1
A2	**Front Panel Board**					
DS1,2	Indicator, LED (Listening, Power ON)	2		28480	1990-0458	
J1	Connector	1		28480		
J2	Connector	1		28480	1251-7424	
Q1-13	Not Assigned					
Q14	ss NPN si	1		28480	1854-0823	
R1-3	var. (10-turn)ww, 10k, ±5%, 2W Zero Adjust (R1), D/A Full Scale Adjust (R2), Power Supply Full Scale Fine Adjust (R3)	3		28480	2100-3624	
R4	var. (10-turn) ww, 100k, ±5%, 2W (Power Supply Full Scale Course Adjust)	1		28480	2100-3623	
R5,6	Not Used					
R7	fxd, film 4.64k, 1%, 1/8W	1	C4-1/8-TO-4641-F	24546	0698-3155	
R8	Not Used					
R9	fxd, film 301, 1%, 1/8W	1	C4-1/8-TO-301R-F	24546	0757-0410	
	spacer	1		28480		
	Power Module on rear panel (includes voltage selection PC Board and fuse)					
C1	fxd, metalized paper, 0.1μF, 20%, 250V (connected between power module terminals B and F)	1		28480	0160-4065	
F1	Line Fuse, 125mA (100/120Vac operation)	1	MDL 1/8	71400	2100-0318	1
F1	Line Fuse, 62.5mA (220/240Vac operation)	1	MDL 1/16	71400	2100-0311	1
	Chassis – Electrical					
S2	Unipolar/Bipolar Switch	1		28480	3101-2287	1
T1	Power Transformer	1		28480	59501-80092	1
	Cable Multi Cond (4)	1		28480	8120-4276	1
	Cable Multi Cond (7)	1		28480	8120-4277	1
	Mechanical					
	Tube, hold down	4		28480	4177-0236	
	IC Socket, 14-pin (Address Switch S1)	1		28480	1200-0485	
	Front Panel	1		28480	59501-00009	
	Rear Panel	1		28480	59501-00010	
	Side Trim	2		28480	5001-0438	
	Foot, 1/2 module	4		28480	5040-7201	
	Top shell	1		28480	3101-0622	
	Bottom shell	1		28480	3101-0623	
	Heatsink (A1U32)	1		28480	1205-0402	
	Fastener Rack Mount	2		28480	1600-1185	
	Spacer (LED)	1		28480	4040-2197	
	Barrier block, cover	1		28480	59501-20005	
	Transformer brackets	2		28480	59501-00011	

Table 6-3. Replaceable Parts

REF. DESIG.	DESCRIPTION	TQ.	MFR. PART NO.	MFR. CODE	HP PART NO.	RS
	Miscellaneous					
	floater pad			28480	9211-1913	
	packing carton			28480	9220-2090	
	Line cord-One supplied according to the user's location, as follows:					
	U.S., Canada, Japan, Italy and Spain			28480	8120-1348	
	United Kingdom			28480	8120-1351	
	East/West Europe, U.A.R.			28480	8120-1689	
	Australia, New Zealand			28480	8120-1369	

Table 6-4. Code List of Manufacturers

CODE	MANUFACTURER ADDRESS
02735	Radio Corp. of America, Solid State and Receiving Tube Division Somerville, N.J.
03508	G.E. Semicondutor Products Dept. Syracuse, N.Y.
04713	Motorola Semiconductor Prod., Inc. Phoenix, Az.
07263	Fairchild Camera and Instrument Mountain View, Ca.
24546	Corning Glassworks, Electronic Components Division Bradford, Pa.
27014	National Semiconductor Corp. Santa Clara, Ca.
28480	Hewlett-Packard Company Palo Alto, Ca.
31595	RCA Corporation, Solid State Division Somerville, N.J.
56289	Sprague Electric Company North Adams, Ma.
71400	Bussman Mfg. Div. of McGraw & Edison Co. St. Louis, Mo.
71590	Globe Union Inc. Milwaukee, Wi.
71785	Cinch Mfg. Co. and Howard B. Jones Div. Chicago, Il.
72136	Electro Motive Mfg. Co., Inc. Willimantic, Ct.
91637	Dale Electronics, Inc. Columbus, Nb.

SECTION VII
CIRCUIT DIAGRAMS AND COMPONENT LOCATION DIAGRAMS

7-1 INTRODUCTION

7-2 This section contains the circuit diagrams necessary for the operation and maintenance of the 59501B HP-IB Isolated D/A, Power Supply Programmer.

7-3 COMPONENT LOCATION DIAGRAMS

7-4 The component location illustrations, Figures 7-1 and 7-2, show the physical location and reference designation of each part on the chassis and on printed circuit board A1. The functional circuit areas identified on Figure 7-2 correspond with the schematic.

7-5 SCHEMATIC DIAGRAMS

7-6 The schematic diagram for Model 59501B, Figure 7-3 consists of two sheets. Sheet 1 illustrates the ac input circuit and the bias voltage supplies. Schematic notes are also included on sheet 1. Sheet 2 illustrates the digital processing and analog output circuits.

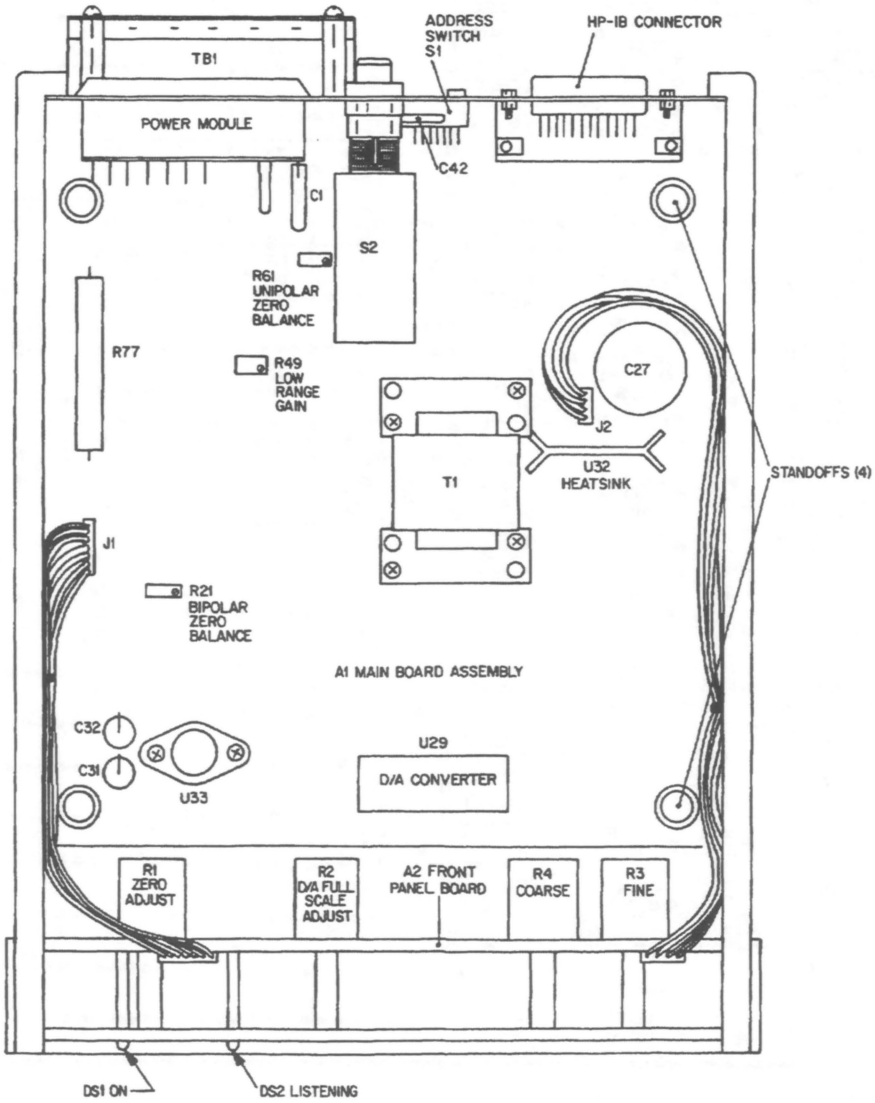

Figure 7-1. Bottom View, Cover Removed

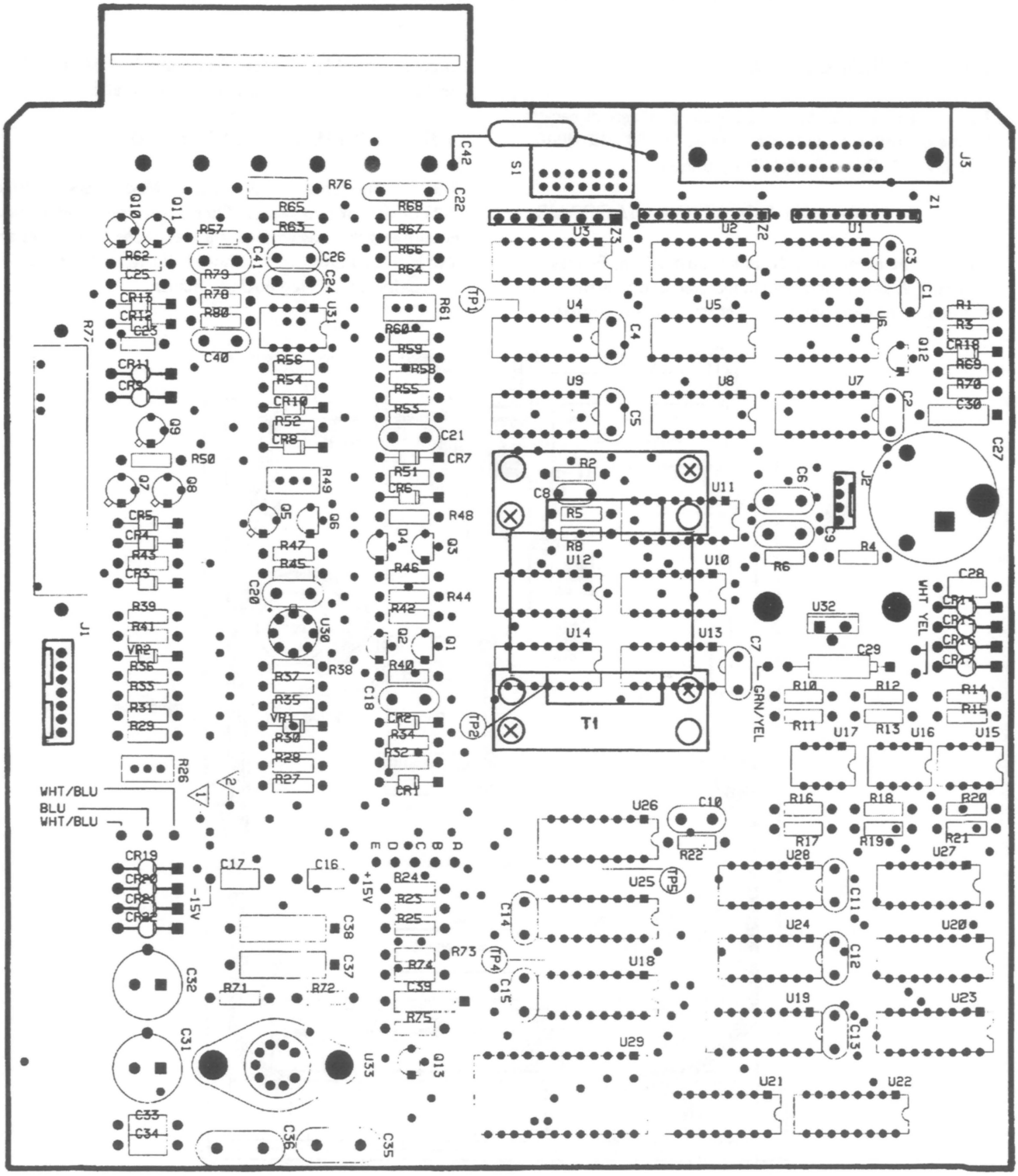

Figure 7-2A. Main Board Assembly A1, Component Location

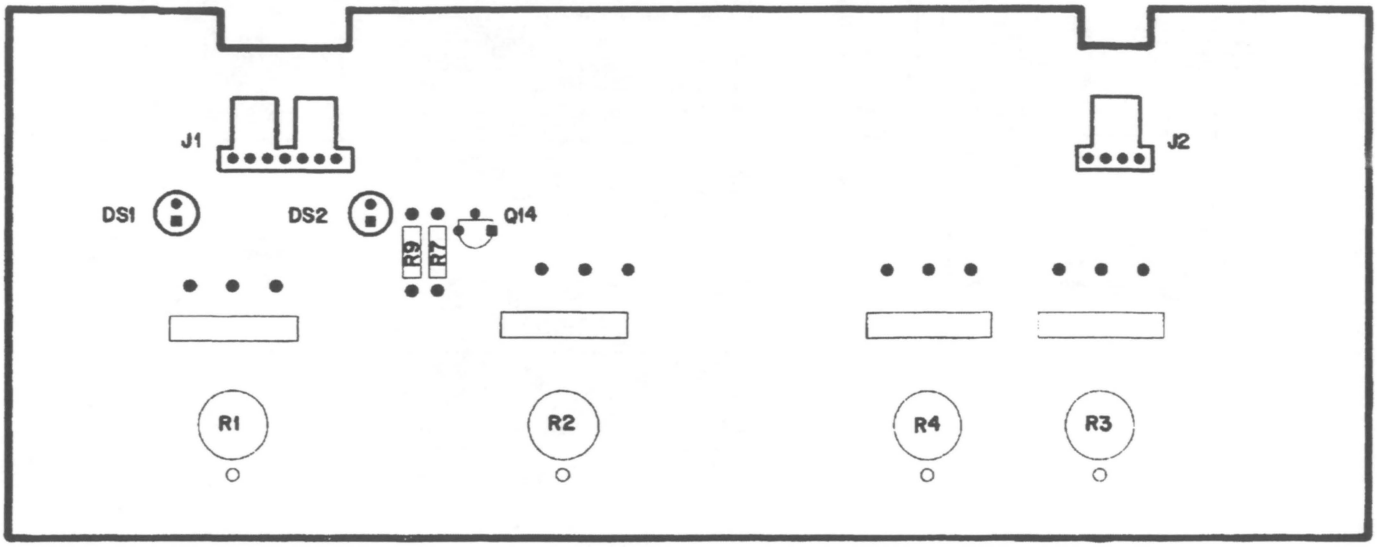

Figure 7-2B. Front Panel Board Assembly A2, Component Location

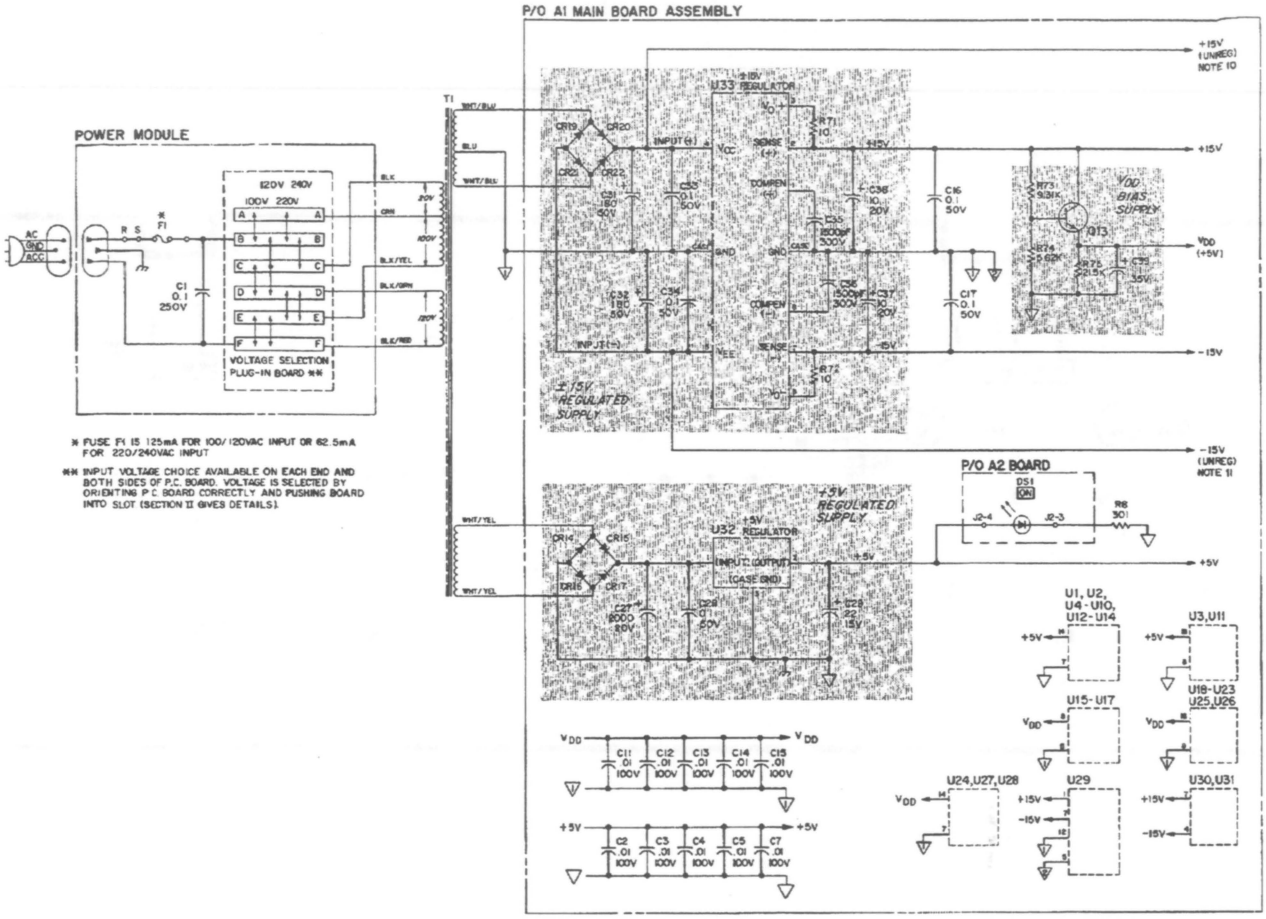

* FUSE F1 IS 125mA FOR 100/120VAC INPUT OR 62.5mA FOR 220/240VAC INPUT

** INPUT VOLTAGE CHOICE AVAILABLE ON EACH END AND BOTH SIDES OF P.C. BOARD. VOLTAGE IS SELECTED BY ORIENTING P.C. BOARD CORRECTLY AND PUSHING BOARD INTO SLOT (SECTION II GIVES DETAILS).

SCHEMATIC NOTES

1. ALL RESISTORS ARE IN OHMS, 1/8W, ±1%, UNLESS OTHERWISE INDICATED.
2. ALL CAPACITORS ARE IN MICROFARADS, UNLESS OTHERWISE INDICATED.
3. PIN LOCATIONS FOR INTEGRATED CIRCUITS (A1U1-A1U33) AND RESISTOR NETWORKS (A1Z1-A1Z3) ARE AS FOLLOWS:

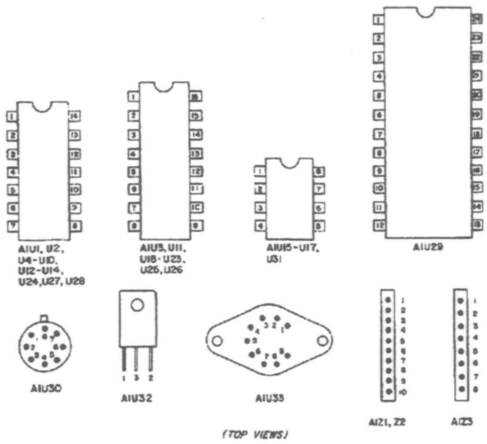

4. THE SQUARE PLATED PADS ON THE P.C. BOARDS INDICATE ONE OF THE FOLLOWING:
   A. PIN 1 OF ANY I.C. OR RESISTOR NETWORK.
   B. POSITIVE END OF A POLARIZED CAPACITOR.
   C. CATHODE OF A DIODE OR EMITTER OF A TRANSISTOR.
5. THE LISTEN ADDRESS FOR THE 59501B IS SPECIFIED BY THE FIVE ADDRESS SWITCHES ON THE REAR PANEL. THE SUGGESTED LISTEN ADDRESS OF "&" IS SELECTED AT THE FACTORY, HOWEVER, ANY ONE OF 31 LISTEN ADDRESSES CAN BE SELECTED.
6. THE REAR PANEL UNIPOLAR/BIPOLAR SWITCH (PUSH-IN, PUSH-OUT TYPE) IS SET TO THE UNIPOLAR POSITION (PUSHED-IN) AS SHIPPED FROM THE FACTORY.
7. [ ] DENOTES FRONT PANEL MARKING.
8. [- - -] DENOTES REAR PANEL MARKING.
9. PIN LOCATIONS FOR FET'S (Q5, Q7-Q9) AND TRANSISTORS (Q1-Q4, Q6, Q12-Q14), ARE AS FOLLOWS:

10. +17V TO +30V MEASURED BETWEEN U33-4 AND ▽
11. -17V TO -30V MEASURED BETWEEN U33-5 AND ▽

Figure 7-3 (Sheet 1). Model 59501B, Bias Voltage Supplies, Schematic Diagram

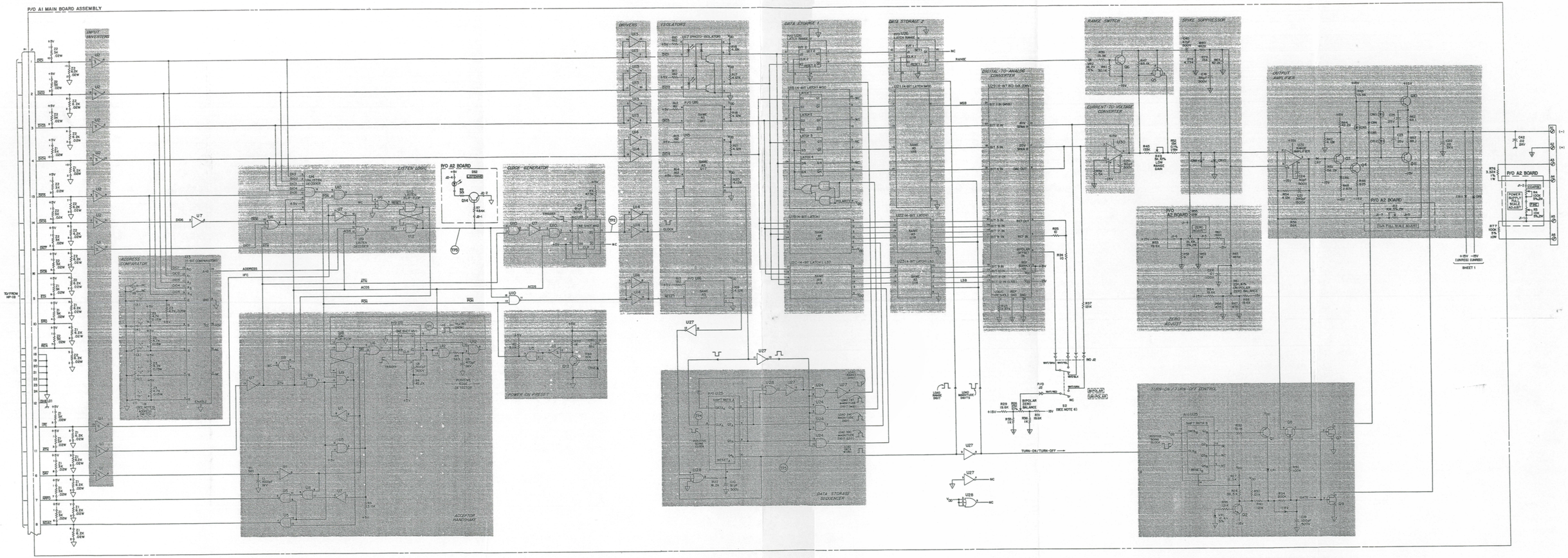

Figure 7-3 (Sheet 2). Model 59501B, Digital Processing and Analog Output Circuits, Schematic Diagram

HEWLETT PACKARD

Printed in USA

Order Part Number
59501-90004

E0483-U0889

Manufacturing Part Number

59501-90004